S M F

SRISHAA

MACHINED FASTENERS PVT.LTD.

ISO - 9001 - 2015 CERTIFIED FASTENERS MANUFACTURING COMPANY

Our Mission

We at Srishaa Machined Fasteners, are committed to deliver products that meet and exceed client's requirements and expectations.

Our Vision

We aim to be the Market Leader.

Our Quality Policy

The Management of Srishaa Machined Fasteners.Pvt. Ltd. is committed to deliver Highest Quality Product and Services in achieving Total Customer Satisfaction.

CERTIFICATE

TÜV AUSTRIA

ZERTIFIKAT | CERTIFICATE | CERTIFICAT | CERTIFICADO | СЕРТИФИКАТ | شهادة | 证书 | 인증서

Management system as per
EN ISO 9001:2015

In accordance with TÜV AUSTRIA CERT procedures, it is hereby certified that

SRISHAA MACHINED FASTENERS PVT. LTD.

Gala No. 3, Deewan and Sons Industrial Estate No. 7,
Navghar, Vasai East, Palghar - 401210,
Maharashtra, India

applies a management system in line with the above standard for the following scope

Manufacture and Supply of Industrial/ Automotive Fasteners & Allied Products

Certificate Registration No. 20100193005536 / 00

Valid until 2022-05-23
Initial certification: 2019-05-24

Certification Body
at TÜV AUSTRIA CERT GMBH

Vienna, 2019-05-24

This certification was conducted in accordance with TÜV AUSTRIA CERT auditing and certification procedures and is subject to regular surveillance audits.
TÜV AUSTRIA CERT GMBH Deutschstraße 10 A-1230 Wien www.tuv.at

Akkreditierung Austria A 0943

MEMBER OF MULTILATERAL RECOGNITION ARRANGEMENT IAF

Online Verification
www.tuv.at/certcheck

SRISHAA
MACHINED FASTENERS PVT.LTD.

Your One-Stop expert in fasteners Solutions

Why Us ?

- Because we work in tandem with you. We do not consider ourselves as vendors; we believe in walking the length in business.
- Because with us you are assured of consistent quality.... always, every time!
- Because we value your business and wholly concentrate on our association with you at the premier level.
- Because we understand your need for the correct product to be delivered on time, everytime!
- Because we know you would rather pay the right price for thr right quality than pay more price for a sub standard product.
- Because.....we simply credit your intelligence in making the right choice us !!

About Us

Our company code is one of measured strategic management, a desire to fulfil client's needs, a nexus of skilled workmanship and an infallible commitment to product quality control.

Our company is a ferrous & non-ferrous fastener manufacturing & supply company. We have been engaged in manufature and supply of precision fasteners of all types. Our clientele include almost all reputed OEM's and Business houses in various fields.

We supply quality industrial fasteners and related products for practically every engineering need.

All our fasteners conform to the highest international standards - we have comprehensive quality checks..... stringent quality control tests are conducted at every stage throughout the manufacturing process which helps us maintain the high quality standard we have set ourselves.

Performance matters; marketing the right product, in the right quality, within the right time frame, in the right price, using the right raw materials and conducting and going about our business in the right manner is what we are all about.

Innovation

Vendor Management Inventory (VMI)

Through the introduction of a managed system we can significantly reduce the time of expanse spent controlling your fastener parts usage-extensively reducing your Total Acquisition Costs.

VMI Benefits :-

The benefit of VMI System are extensive it essentially reduces the amount of non-value added time spent on getting the right destination at the right time.

- Vendor based consolidated & reduction.
- Decreased inventory & Stock holding costs.
- Release administration costs.
- Condensed administration costs.
- Elimination of stock outs.
- Minimized storage space.

The Srishaa machined fasteners advantage

At Srishaa Machined Fasteners, we go beyond being a fastener manufacturer & seek to provide high-quality customized fasteners solution to meet the exact requirements of discerning clients. Here are just **5** reasons why we are class apart from its peers :

We provide peace of mind, not just products

Any factory can make a product, but it takes experience & expansive knowledge to help solve critical issues faced by clients. We come with in depth exposure to the industry, and employs proven and tested methods to provide continuously stable quality. This allows our clients to fully concentrate on their business knowing their fasteners need will be effectively and efficiently meet .

Our people are as advanced as our technology

Technology is nothing without the human touch. This is why we deploy the latest manufacturing equipment combined with dedicated, highly trained and vastly experienced personnel to ensure everything we do is fortified with the quality and attention to detail that comes with a long term commitment to delivering the best.

Good is never good enough for us

At Srishaa Machined Fasteners, quality is everything.That's why we use only the most advanced inspection equipment. WHY we have tight control measures at capable of delivering zero-defect customized solutions to clients on demand.

Building long term relationship is our first priority

We approach our clients not as suppliers, but as business partners working together to achieve common goals. We offer our clients ideas on how to improve their customized solutions, help them meet even the most urgent of deadlines, and even recommend ways to reduce production costs. All to create long-lasting and mutually beneficial relationship.

Our track record speaks for itself

Srishaa Machined Fasteners has customized quality fasteners solutions for clients in countless fields.
Whichever your area of endeavour, we can create the most accurate,most relevant and most effective fasteners solutions for you.

Quality Control Flow Chart

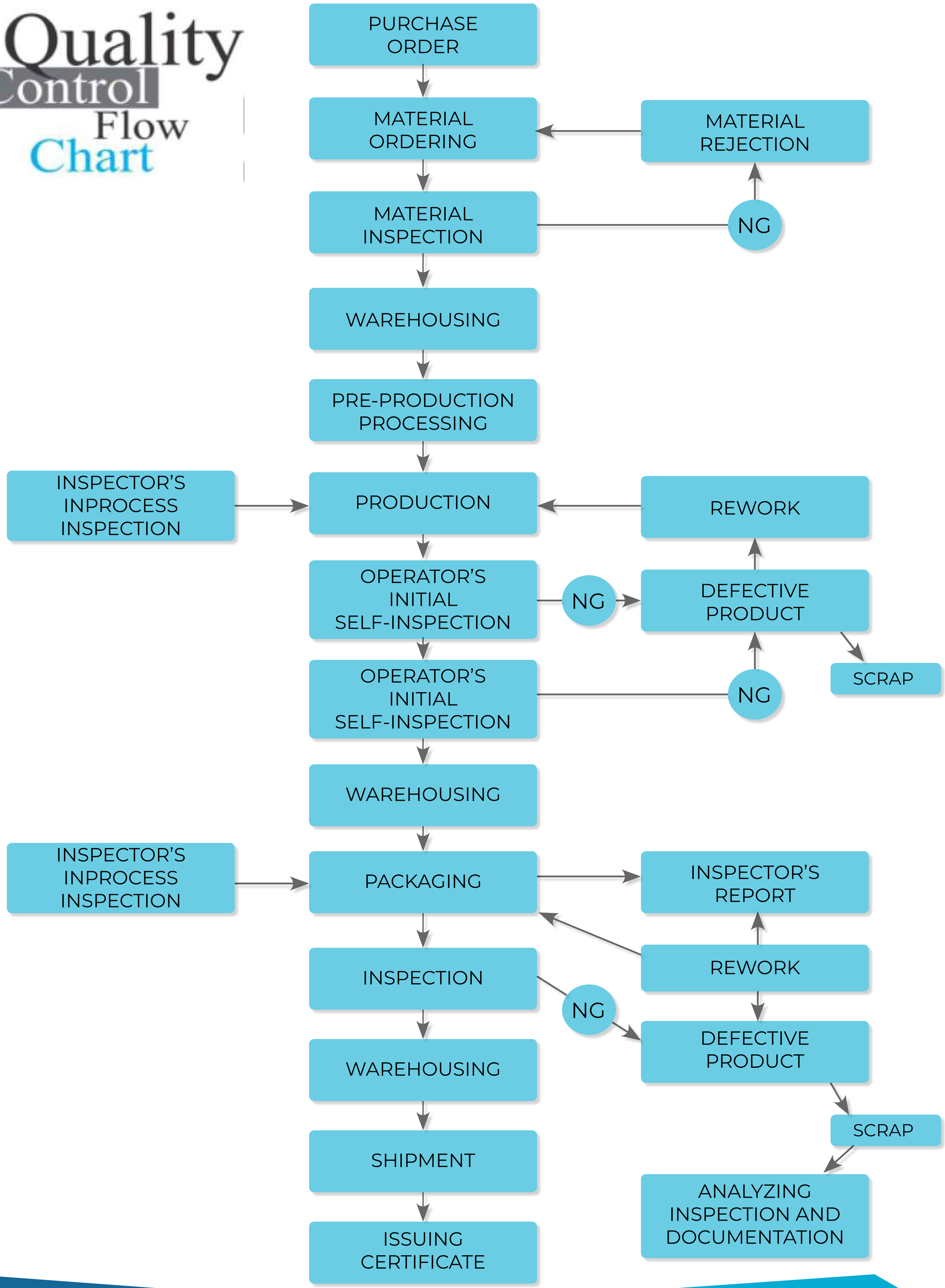

SRISHAA
MACHINED FASTENERS PVT.LTD.

Major Industries We Serve....

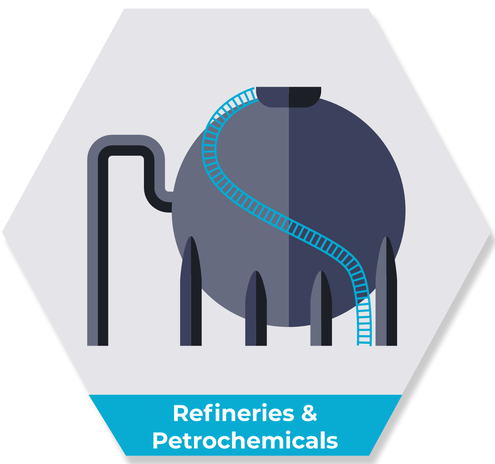
Refineries & Petrochemicals

Chemical & Fertilizers

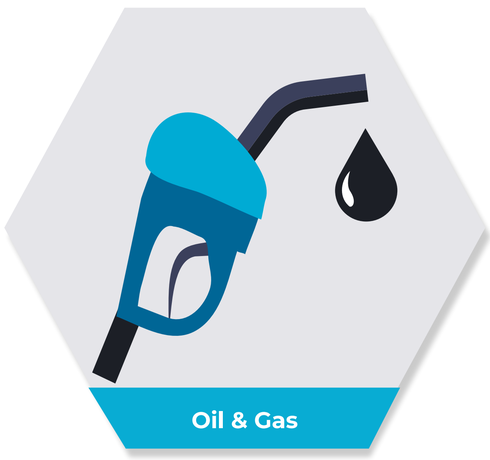
Oil & Gas

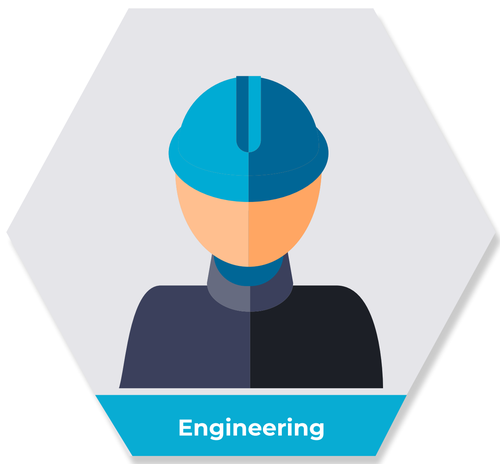
Engineering

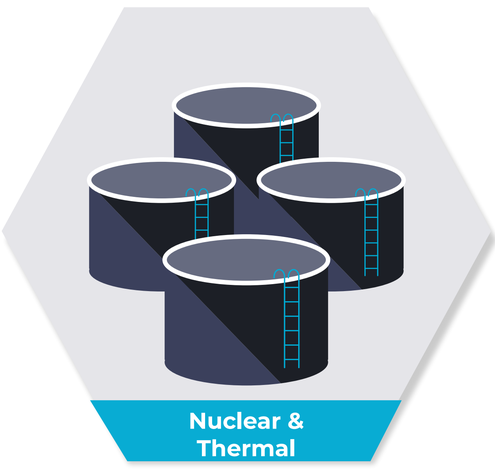
Nuclear & Thermal

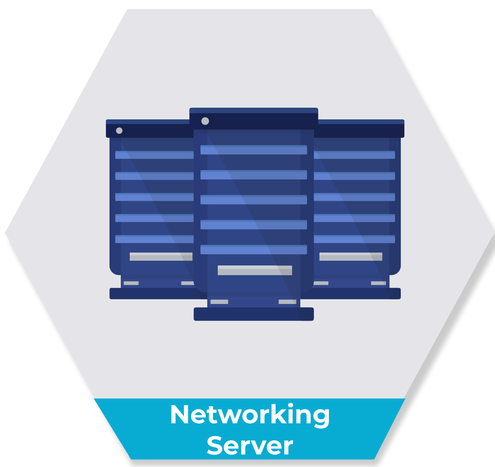
Networking Server

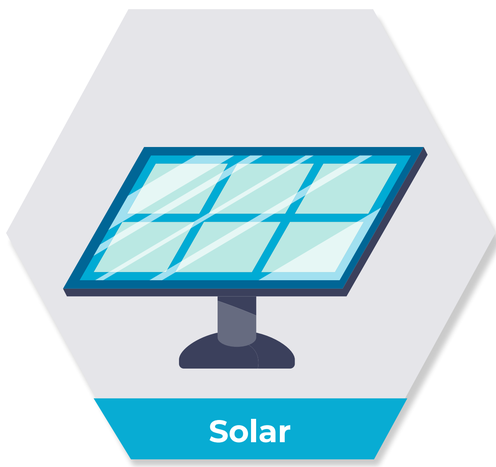
Solar

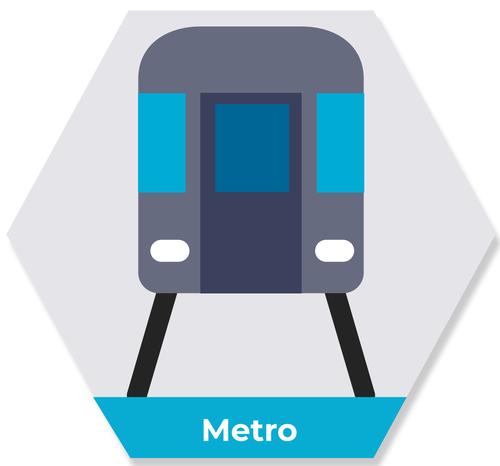
Metro

Railways

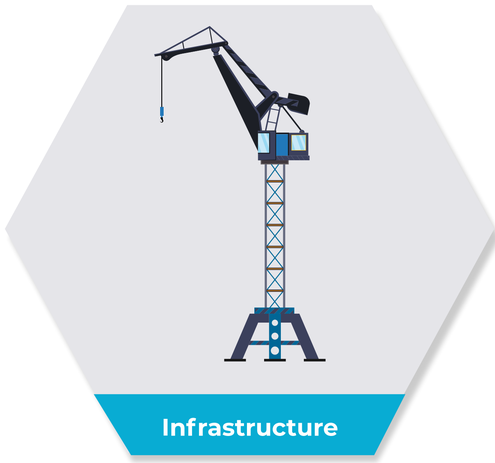
Infrastructure

Ship Building

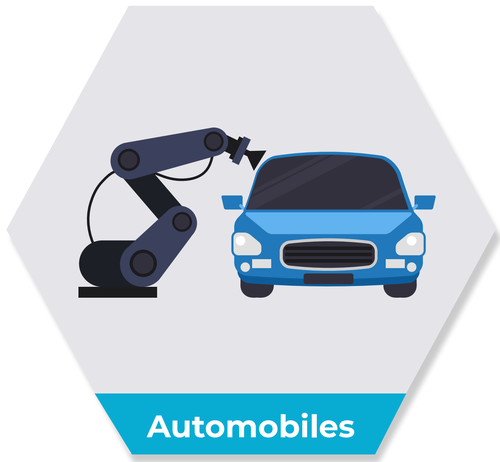
Automobiles

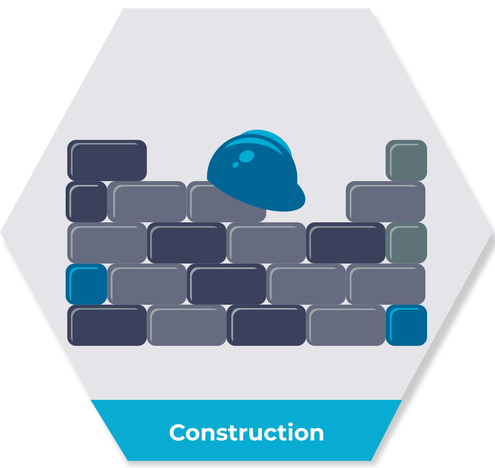
Construction

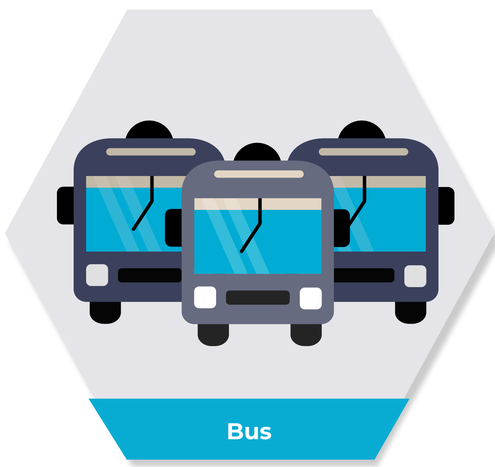
Bus

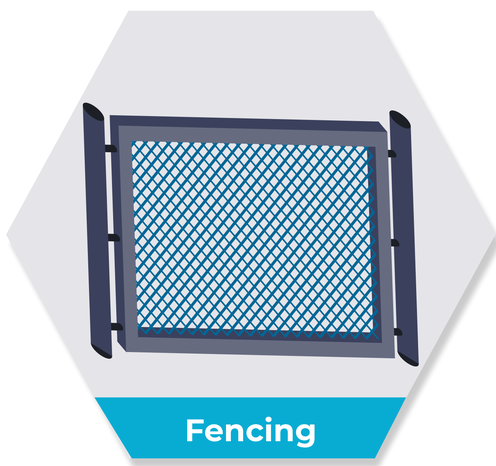
Fencing

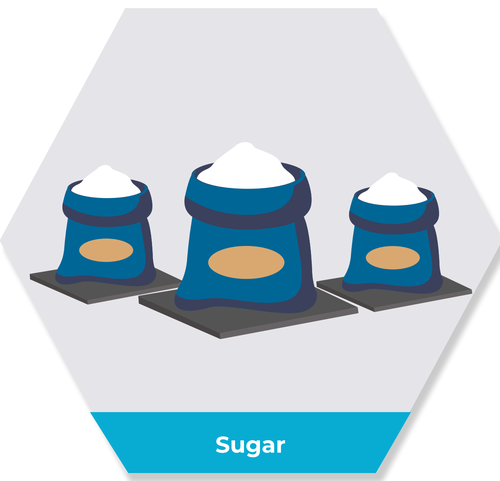
Sugar

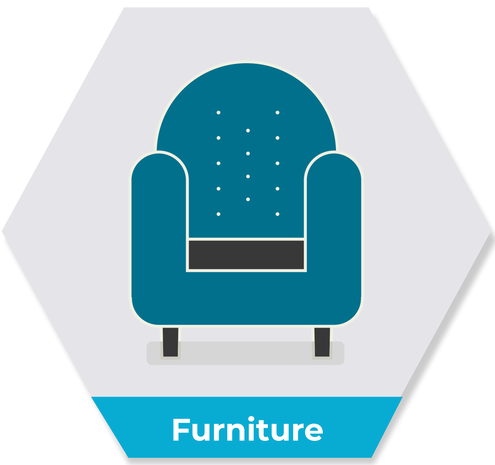
Furniture

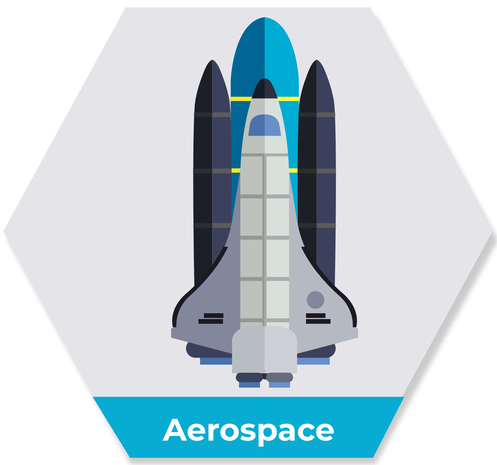
Aerospace

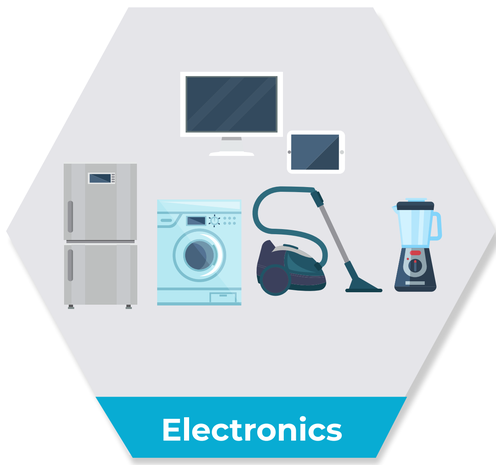
Electronics

Defence

SRISHAA
MACHINED FASTENERS PVT.LTD.

Head Styles

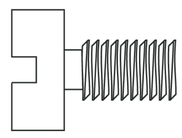
Cheese

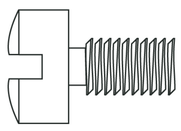
Filister

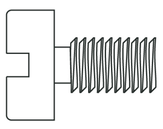
Pan

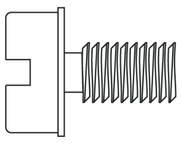
Pan Flanged
(Washer)

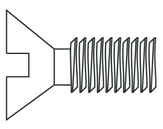
Flat (Countersunk)

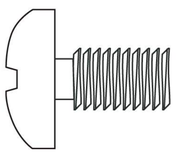
Truss

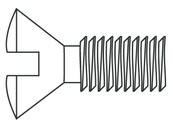
Oval (Raised)

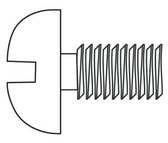
Round

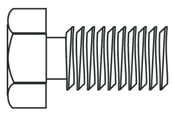
Indented Hex

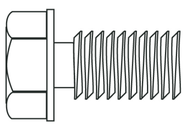
Indented Hex
Flanged (Washer)

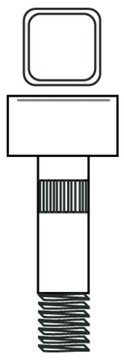
Square Bolt

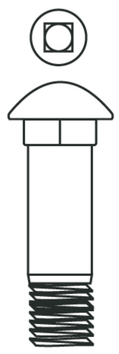
Carriage Bolt

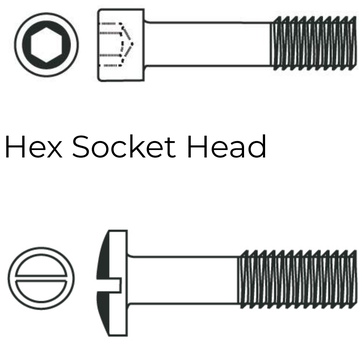
Hex Socket Head

Binding

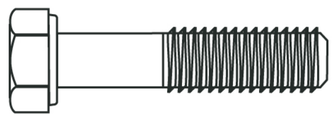
Hex Bolt

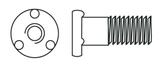
Weld Bolt

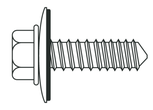
Sem Screw

Drive Style

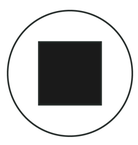
Sq Socket

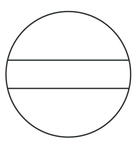
Slotted

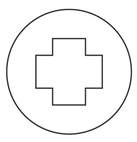
Philips

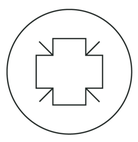
Pozi

Cross
Recess

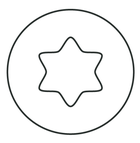
Torx

Hex
Socket

Combination

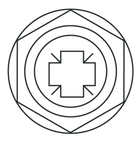
Index Head
Pozi

Index Head
Phillips

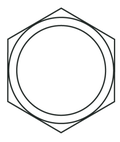
Index Head

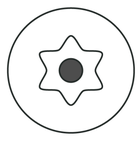
Security Torx
Head Pin

Rivets

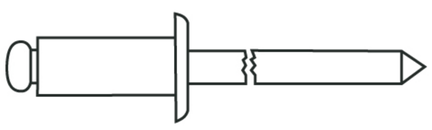
Blind (Pop)

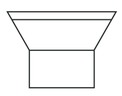
CSK

Raised
Head

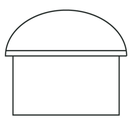
Snap
Head

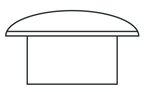
Mushroom

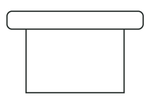
Flat Head

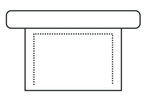
Semi
Tubular

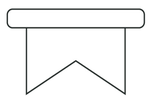
Bifur

Grub Screws

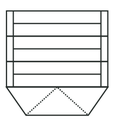
Plain Cup
DIN 916

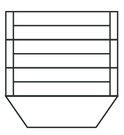
Flat
DIN 913

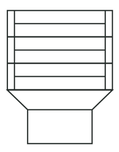
Half Dog
DIN 915

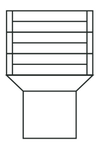
Full Dog
DIN 915

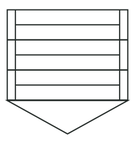
Cone
DIN 915

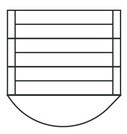
Oval

Tapping Screws

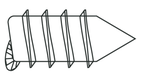
Type A has a gimlet point applied to a thread -forming screw having a coarse-spaced thread.

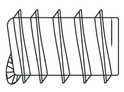
Type B has a blunt,tapered, thread-forming point with incomplete entering threads.

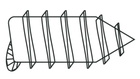
Type AB has a gimlet point applied to a thread-forming screw.

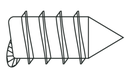
Type BP has a sharp, conical or pinched point applied to a type B screw.

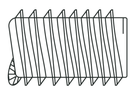
Type C has a blunt, tapered, thread-forming point with incomplete entering threads.

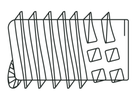
Type BF has a blunt, tapered, thread-cutting point with incomplete entering threads and multiple flutes.

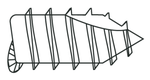
Type 17 has a sharp, thread-cutting point with incomplete entering threads and a wide, milled cutting slot.

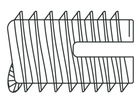
Type BG or H has a slotted, blunt, tapered, thread-cutting point with incomplete entering threads.

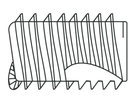
Type BT or 25 has a blunt, tapered, thread-cutting point with incomplete entering threads and a wide, milled cutting slots

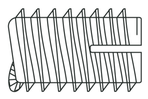
Type D or 1 has a blunt, tapered, thread-cutting point with incomplete entering threads and one flute.

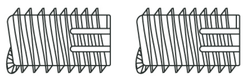
Type F has a blunt, tapered, thread-cutting point with incomplete entering threads and multiple flutess.

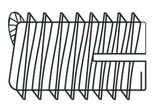
Type G has a slotted, blunt, tapered, thread-cutting point with incomplete threads.

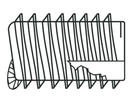
Type T or 23 has a blunt, tapered, thread-cutting point with incomplete entering threads and a wide, milled, cutting slot.

BOLTS

BOLTS
HEX HEAD SCREWS
HEX CAP SCREW
HEX FLANGE BOLTS
LAG SCREW
HEX SOCKET CAP SCREWS

BOLTS

BOLTS
T BOLTS
WHEEL BOLTS
SQ. HEAD SET SCREW
SQ. HEAD M/S
ELEVATOR BOLTS
THUMB SCREWS
SHOULDER SCREW
WING SCREW
U BOLT
WHEEL BOLTS SET
SOCKET CSK HEAD CAP SCREW
HOOK
EYE BOLTS
THREADED BOLTS
BUTTON HEAD CAP SCREW

BOLTS / STUDS

- Bolts
- Ball plugers
- Pipe plugs
- Socket set screws
  Special studs

BOLTS

PIPE PLUGS

SOCKET SET SCREWS

BALL PLUNGERS

SPECIAL STUDS

NUTS

HEX NUTS

- Hex Nut
- Locking Nuts
- Flange Nuts

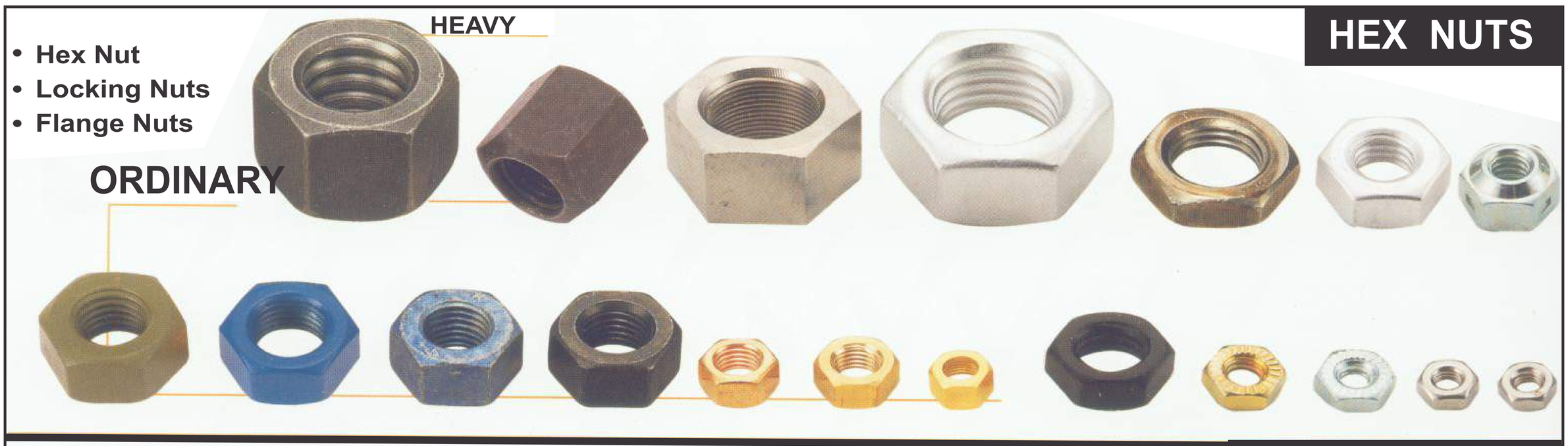

LOCKING NUTS

FLANGE NUTS

NUTS

- Hex Castle Nut
- Coupling Nuts
  Square / Rectangular Nut
- Conical / Kep Nuts
- Weld Nuts
- Wing Nuts
- Hex Cap Nuts

HEX CASTLE NUT

SQUARE / RECTANGULAR NUT

WING NUTS

COUPLING NUTS

WELD NUTS

CONICAL / KEP NUTS

HEX CAP NUTS

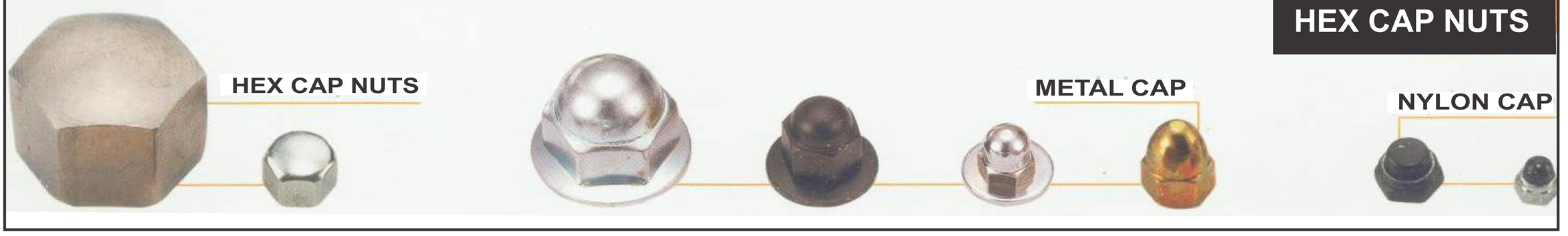

NUTS

SPECIAL NUTS
PIPE NUTS
SPECIAL NUTS
CONE NUTS
BRASS INSERT RUBBER NUTS
CLINCH NUTS
INVIOLABLE NUTS
WHEEL NUT

NUTS

- SPOT WELDING NUTS
- STAMPING NUTS
- TEE NUTS
- SPRING NUTS
- CAGE NUTS
- PLATE NUTS
- ASSEMBLY PARTS
- RIVET NUTS

SPOT WELDING NUTS

RIVET NUTS

TEE NUTS

ASSEMBLY PARTS

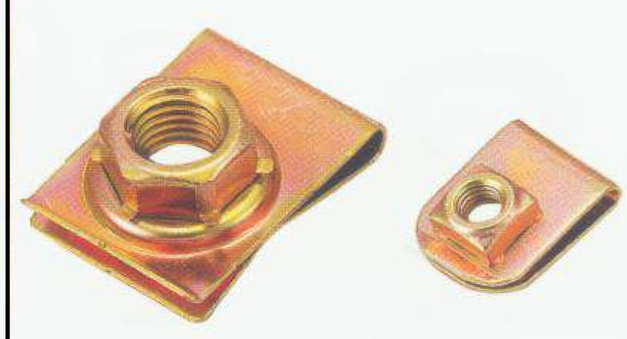

SPRING NUTS

CAGE NUTS

PLATE NUTS

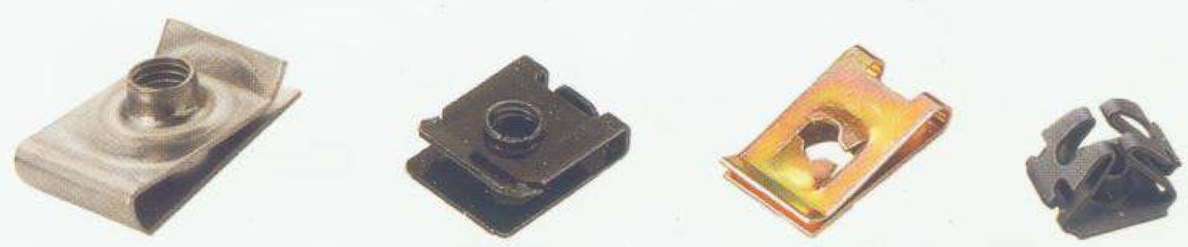

STAMPING NUTS

SCREWS

TRILOBULAR/TAPTITE/PLASTITE/THREAD FORMING SCREWS

- Thread Forming Screws
- Thread Cutting Screws
- Machine Screws
- Window Screws

THREAD CUTTING SCREWS

WINDOW SCREWS

MACHINE SCREWS

SCREWS

Sems Screws

- Sems Screws
- Screws with Locking Patch

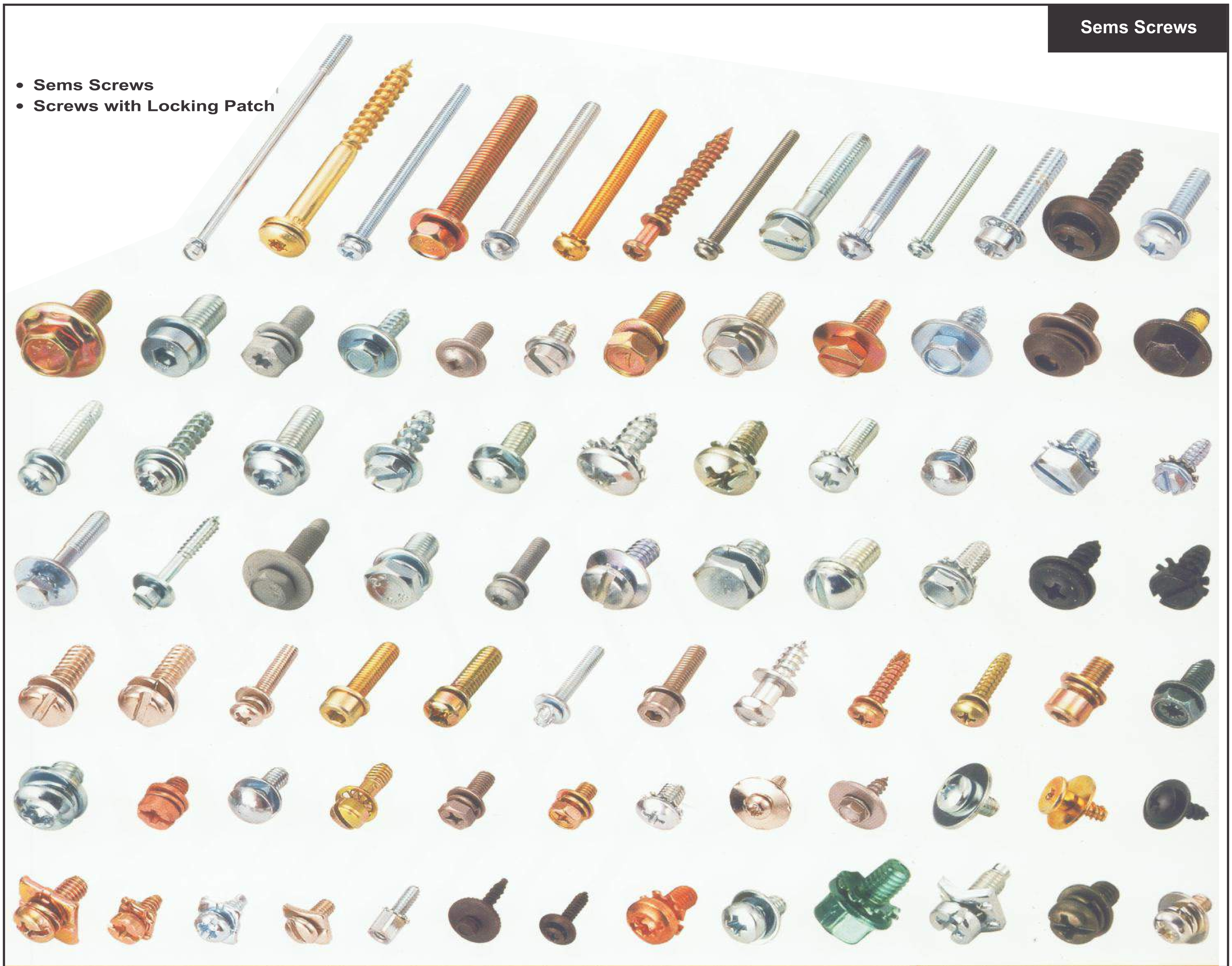

Screws with Locking Patch

SCREWS

MICRO SCREWS

- Special Screws
- Micro Screws

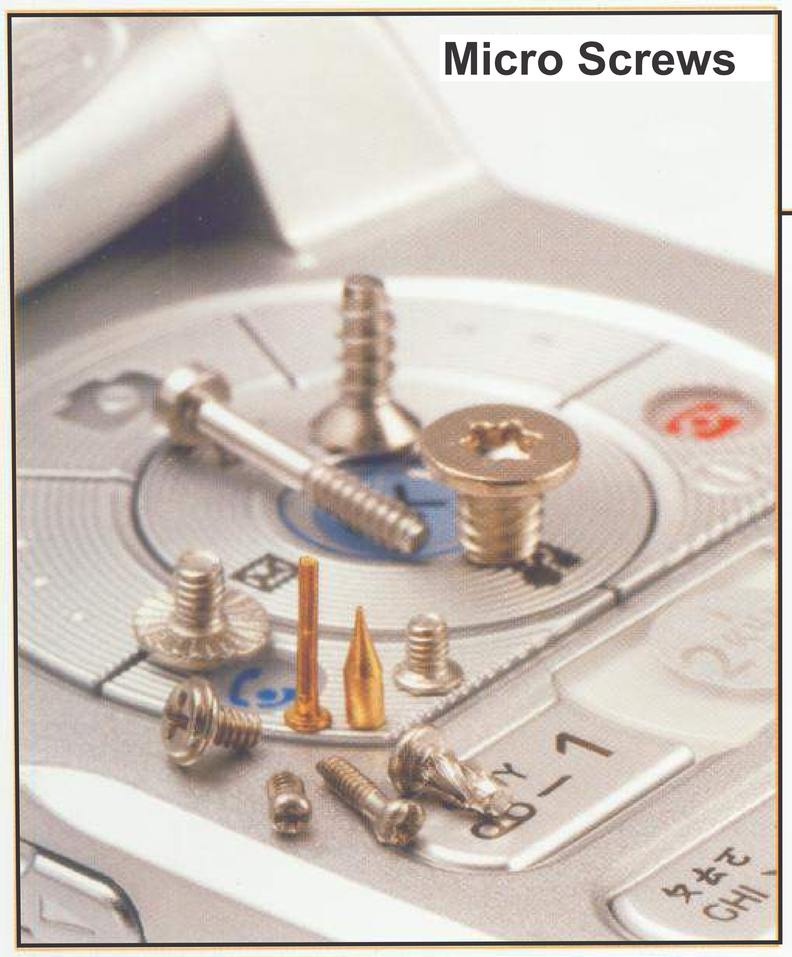

SPECIAL SCREWS

SCREWS

WOOD SCREWS & OTHER SHARP POINT SCREWS

- Wood Screws & Other Sharp Point Screws
- Hi-Lo Thread Screws

HI-LO THREAD SCREWS

SCREWS

CHIPBOARD SCREWS

- Chipboard screws
- Tapping screws
- Drywall screws

DRYWALL SCREWS

TAPPING SCREWS

SCREWS

SELF DRILLING SCREWS

Self Drilling Screws

SCREWS

- Nylon Cover Cap Head
- Stainless Steel Cover Cap Head
- Spoon Point
- Painted Head
- Self Drilling Screws

STAINLESS STEEL COVER CAP HEAD

NYLON COVER CAP HEAD

SPOON POINT

SELF DRILLING SCREWS

WASHER / RING

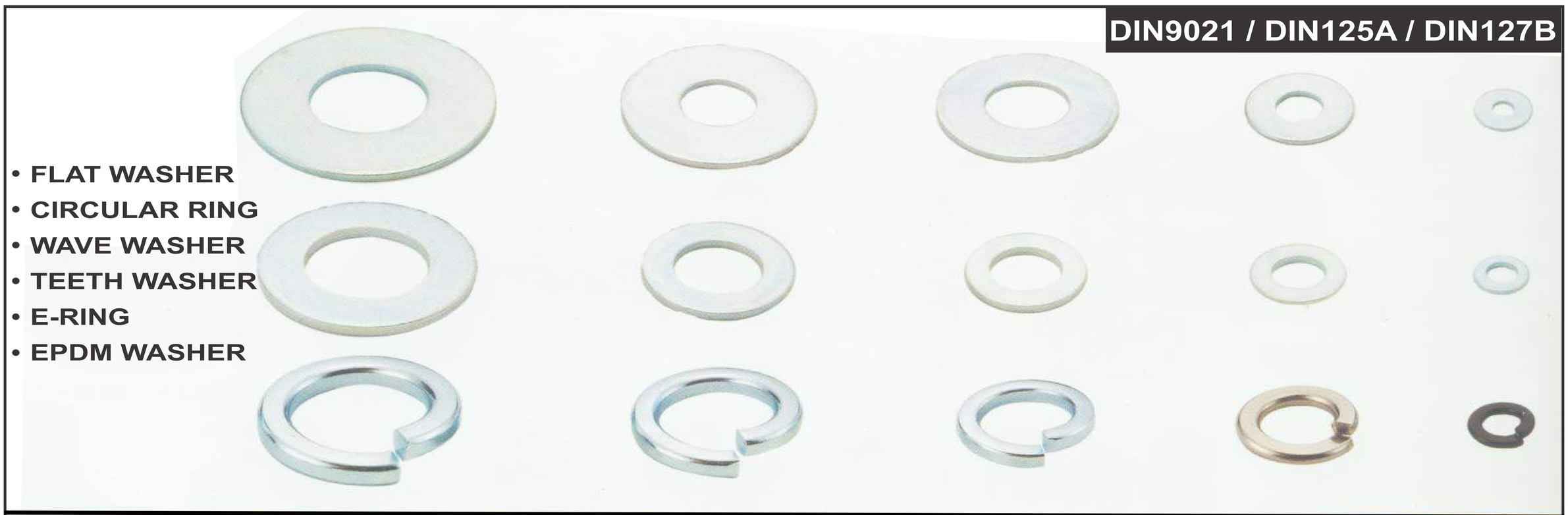
DIN9021 / DIN125A / DIN127B
• FLAT WASHER
• CIRCULAR RING
• WAVE WASHER
• TEETH WASHER
• E-RING
• EPDM WASHER

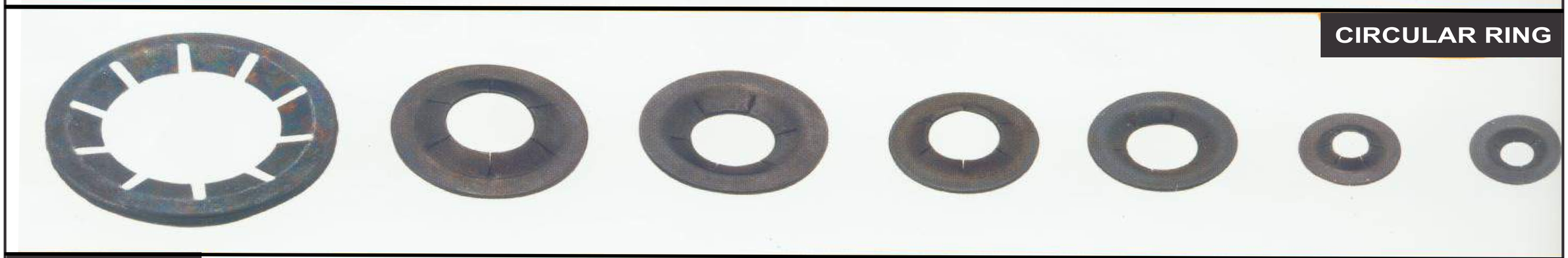
CIRCULAR RING

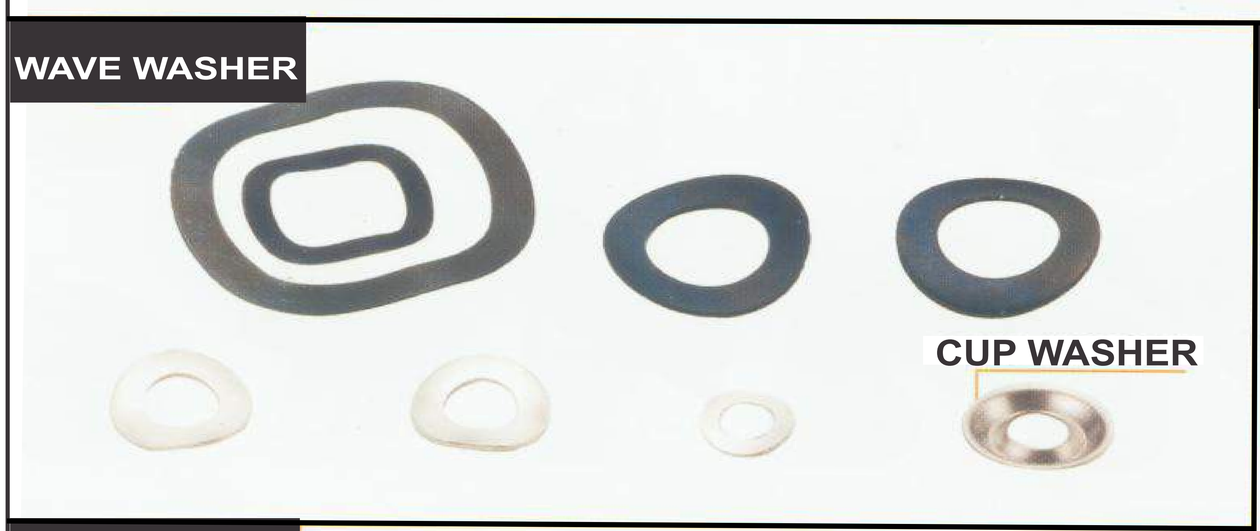
WAVE WASHER
CUP WASHER

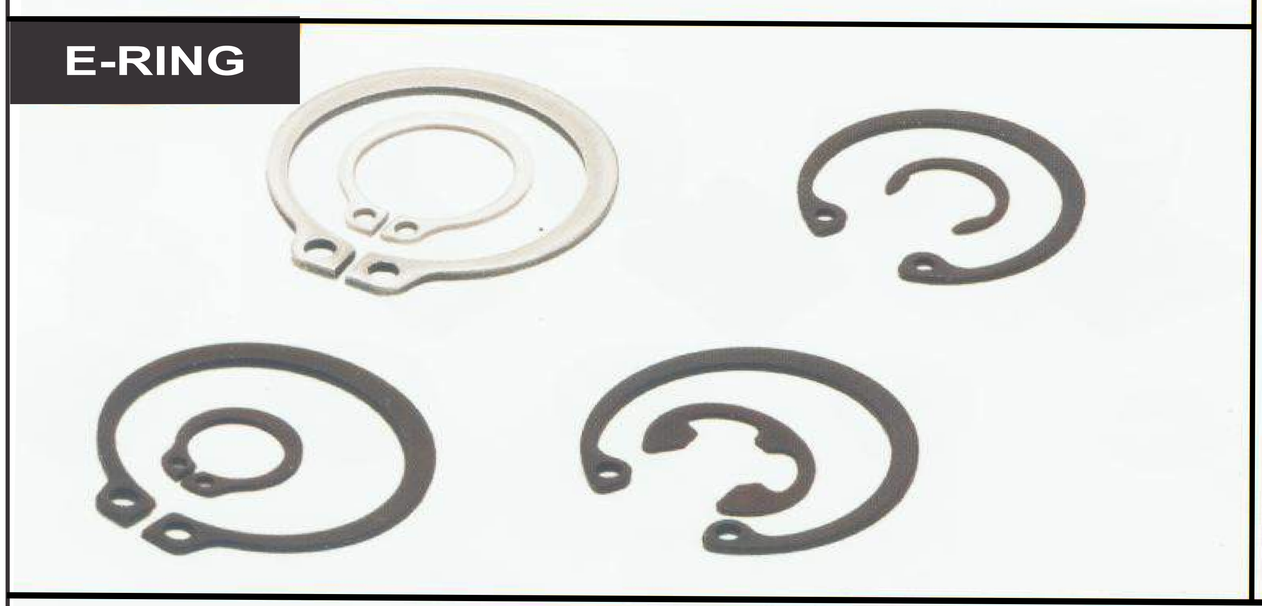
E-RING

TOOTH WASHER

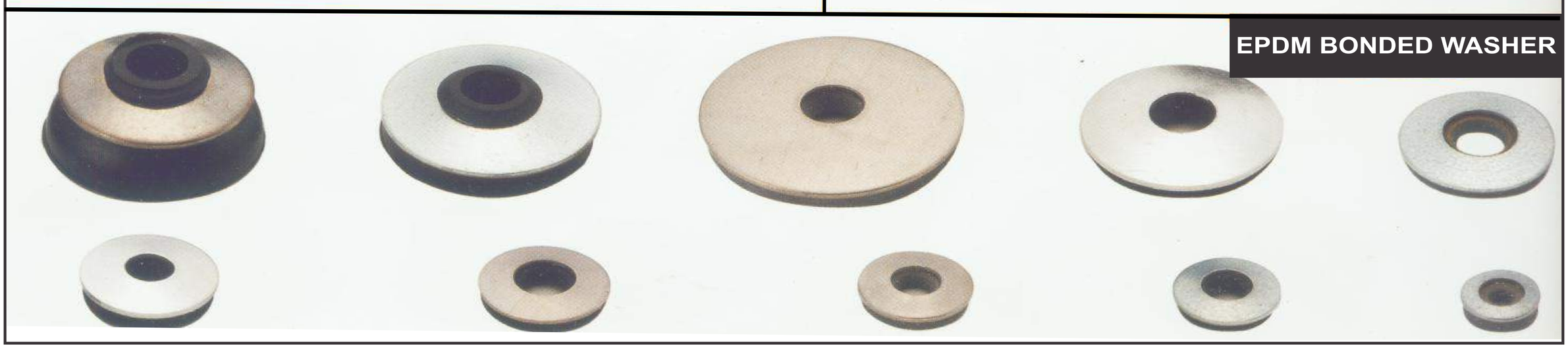
EPDM BONDED WASHER

ANCHORS

- Anchors with sleeve
- Other anchors
- Nylon material pluge / Anchors
- Metal & wire rope fittings

Anchors with nylon sleeve

Metal & wire rope fittings

Nylon material pluge / Anchors

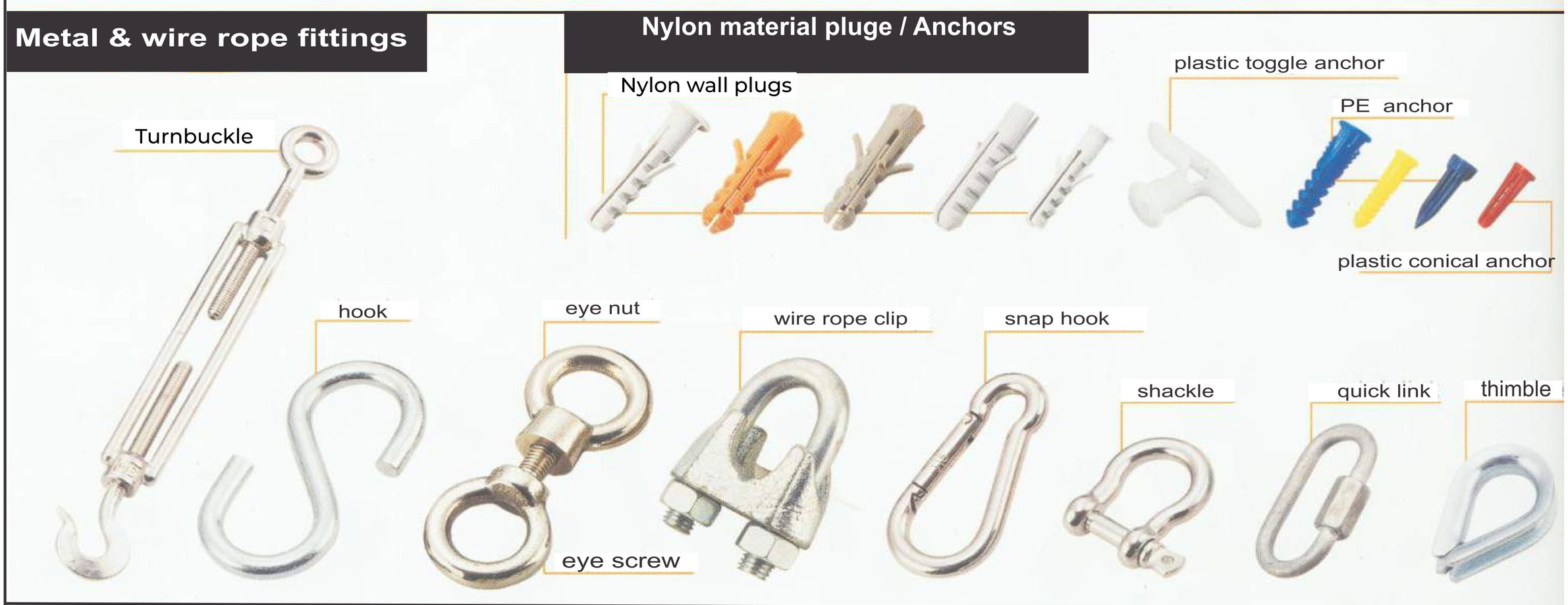

Other anchors

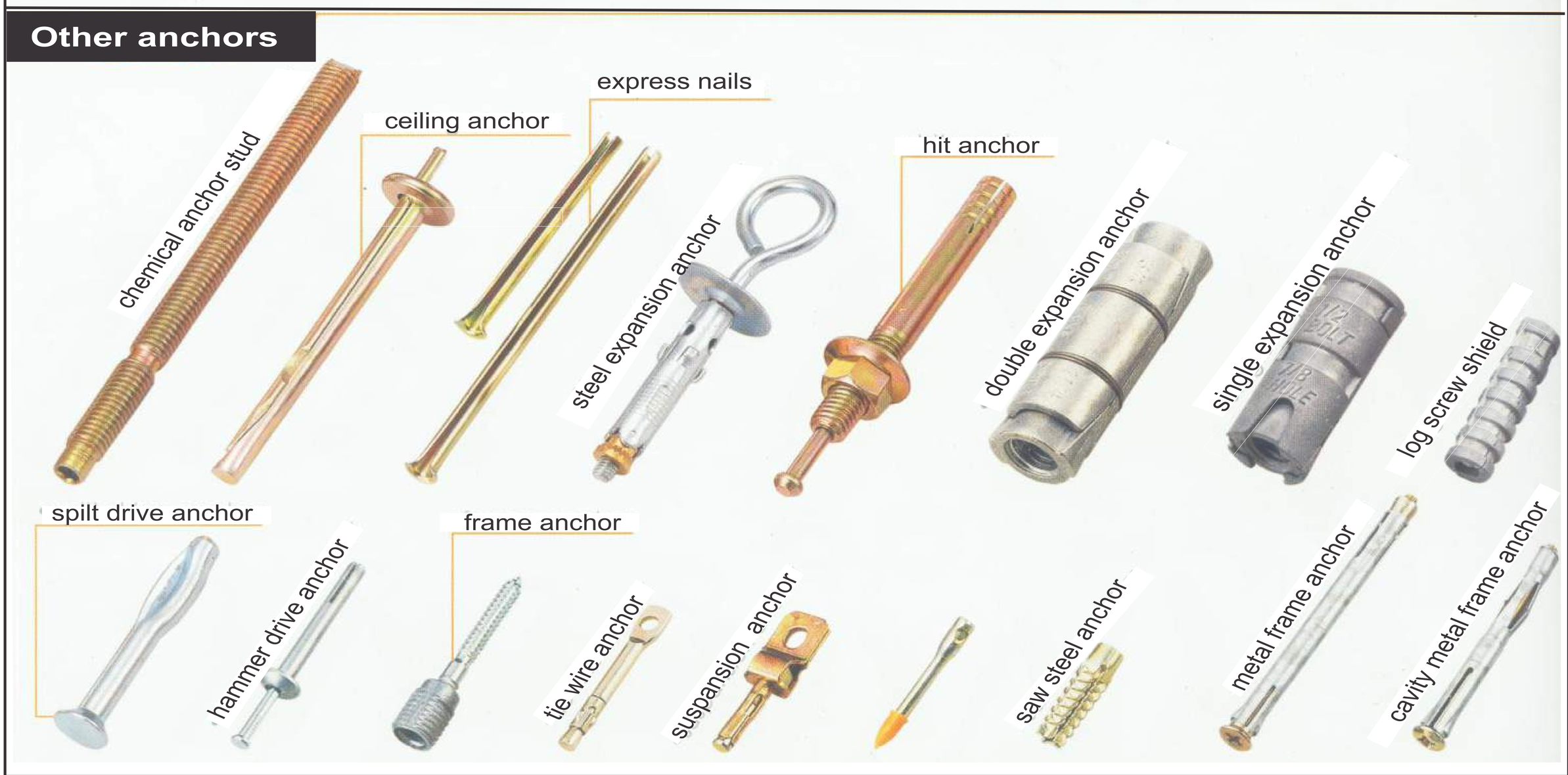

SRISHAA
MACHINED FASTENERS PVT.LTD.

ANCHORS

- WEDGE ANCHORS
- SLEEVE ANCHORS
- SHIELD ANCHORS
- DROP IN / CUT ANCHORS
- HOLLOW WALL ANCHORS
- SPEED PLUGS & TOOL
- TOGGLE ANCHORS
- GRAVITY ANCHORS

SLEEVE ANCHORS

DROP IN / CUT ANCHORS

HOLLOW WALL ANCHORS

WEDGE ANCHORS

TOGGLE ANCHORS

GRAVITY ANCHORS

SHIELD ANCHORS

NYLON PRODUCTS

NYLON / PVC / PLASTIC / EPDM PRODUCTS

MACHINING PARTS

STAMPING PARTS

PINS/NAILS/RIVETS

PINS

- Pins
- Nails
- Rivets
- Hose clamps

HOSE CLAMPS

NAILS

RIVETS

SRISHAA
MACHINED FASTENERS PVT.LTD.

FURNITURE SCREWS & ASSOCIATES

EYE SCREWS/BOOKS
INSERT NUTS
JOINT CONNECTOR NUTS
BARREL NUT
(STEEL / ZINC ALLOY)
WING NUTS (DIE CASTING)

EYE SCREWS/HOOKS

INSERT NUTS

BARREL NUT (STEEL / ZINC ALLOY)

JOINT CONNECTOR NUTS

BREAK MACHINE SCREWS

WING NUTS(DIE CASTING)

OTHERS FOR FURNITURE

SRISHAA
MACHINED FASTENERS PVT.LTD.

FURNITURE SCREWS & ASSOCIATES

- CONFIRMAT SCREWS
- JOINT CONNECTOR
- EURO SCREWS
- OTHERS FOR FURNITURE
- BINDING POST NUTS/SETS
- SHELL SUPPORTS
- HANGER BOLTS

CONFIRMAT SCREWS

JOINT CONNECTOR

HANGER BOLTS

EURO SCREWS

SHELF SUPPORTS

BINDING POST NUTS/SETS

Type	Standard	Name
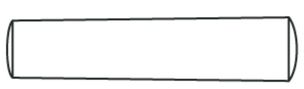	Din 1 / ISO 2339	Taper Pins
	Din 7 / ISO 2338	Paralle Pins
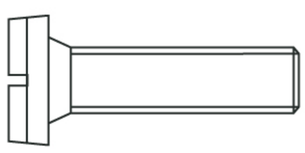	Din 84 / ISO 1207	Slotted Cheese Head Screws
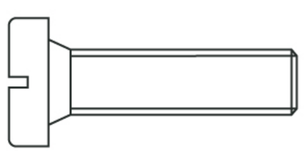	Din 85 / ISO 1580	Slotted Pan Head Screws
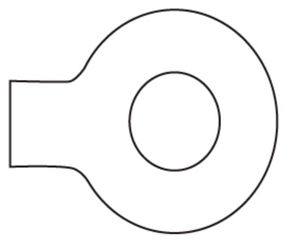	Din 93	Tabwashers with 1 tab
	Din 94 / ISO 1234	Split Pins
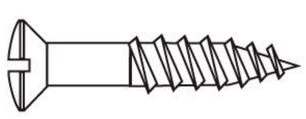	Din 95	Slotted Raised Countersunk Head Wood screws
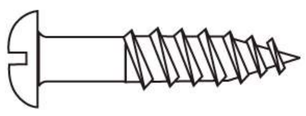	Din 96	Slotted Round Head Wood Screws
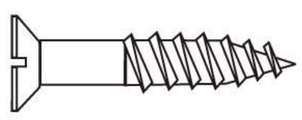	Din 97	Slotted Countersunk Head Wood Screws

Type	Standard	Name
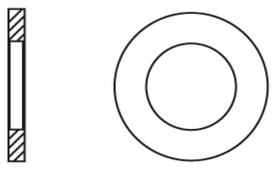	Din 125 A / ISO 7089	Plain Washers
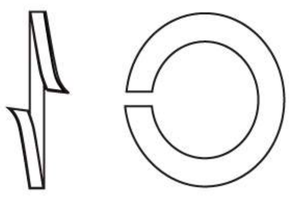	Din 127 A	Spring Form Washers A
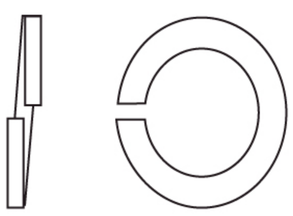	Din 127 B	Spring Lock Washers B
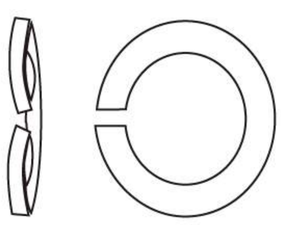	Din 128 A	Curved Spring Lock Washers
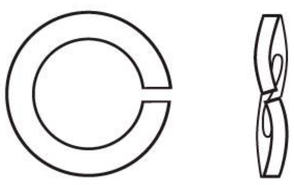	Din 128 B	Splinter Pad - Form B
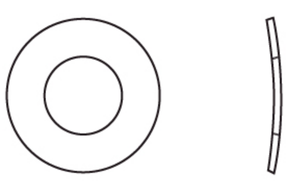	Din 137 A	Curved Spring Washers
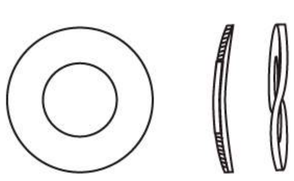	Din 137 B	Wave Spring Washers
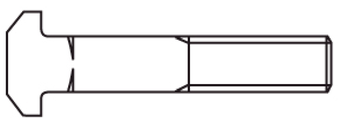	Din 186	T-Head bolts with square neck Head
	Din 315 A	Wing Nuts , American Type

Type	Standard	Name
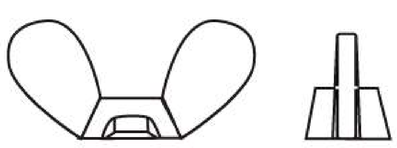	Din 315	Wing Nuts
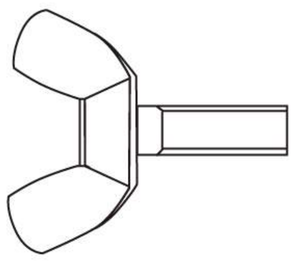	Din 316 A	Wing Screws, American Type
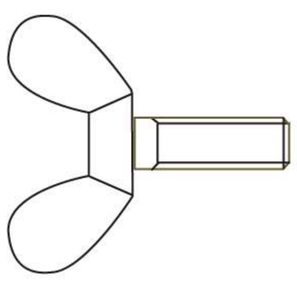	Din 316	Wing Screws
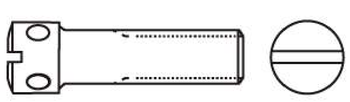	Din 404	Slotted Capstan Screws
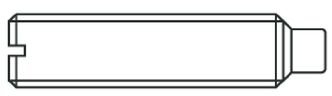	Din 417 / ISO 7435	Slotted Set Screws With Long Dog Point
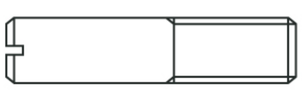	Din 427 / ISO 2342	Slotted Headless Screws With Chamfered End
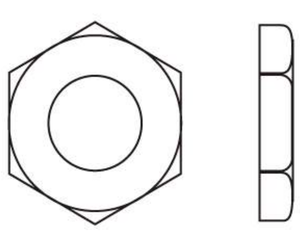	Din 431	Pipe Nuts
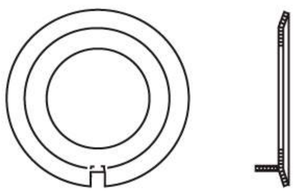	Din 432	Washers With External Tab
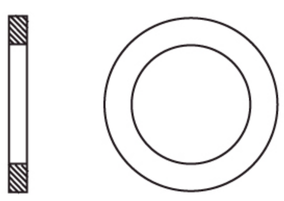	Din 433 / ISO 7092	Washers For Cheese Head Screws

Type	Standard	Name
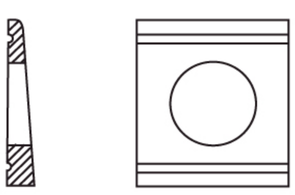	Din 434	Square Taper Washers For U-Sections
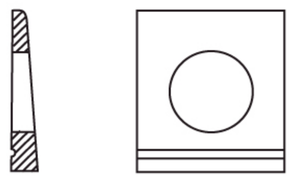	Din 435	Square Taper Washers For I-Sections
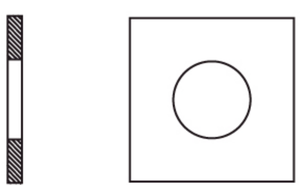	Din 436	Square Washers For Wood Constructions
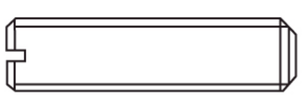	Din 438 / ISO 7436	Slotted Set Screws With Cup Point
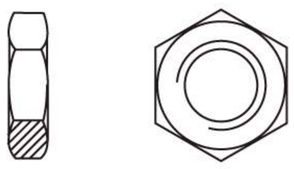	Din 439 / ISO 4035	Hexagon Thin Nuts
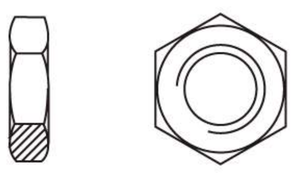	Din 439 / ISO 8675	Hexagon Thin Nuts, Fine Pitch
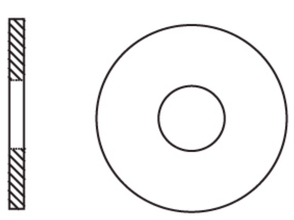	Din 440 R / ISO 7094	Washers, especially for wood constructions - Form R
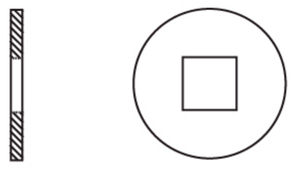	Din 440 V / ISO 7094	Washers, especially for wood constructions - Form V
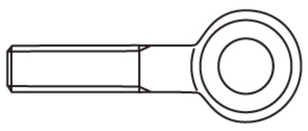	Din 444	Eye Bolts

Type	Standard	Name
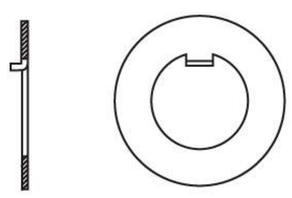	Din 462	Tabwashers with Internal Tab for Nuts Din 1804
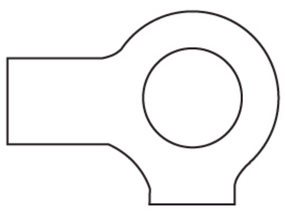	Din 463	Tabwashers with 2 Tabs
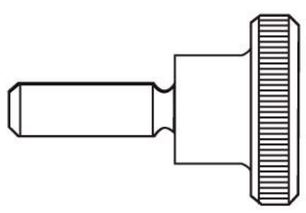	Din 464	Knurled Thumb Screws, High Type
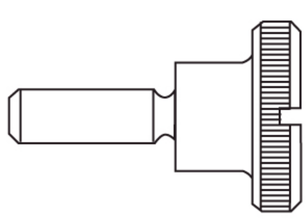	Din 465	Knurled Thumb Screws, High Type, (Slotted)
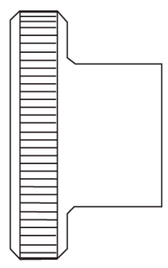	Din 466	Knurled Thumb Nuts, High Type
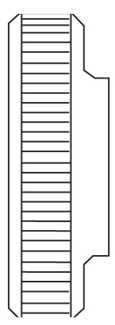	Din 467	Knurled Thumb Nuts, Thin Type
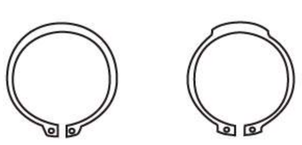	Din 471	Retaining Rings for Shafts
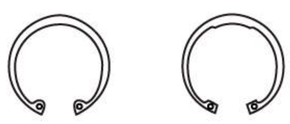	Din 472	Retaining Rings for Bores
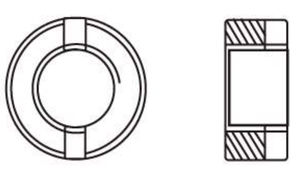	Din 546	Slotted Round Nuts

Type	Standard	Name
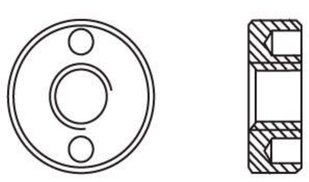	Din 547	Two-hole nuts
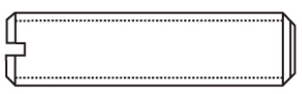	Din 551 / ISO 4766	Slotted Set Screws with Flat Point
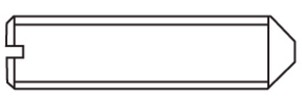	Din 553 / ISO 7434	Slotted Set Screws with Cone Point
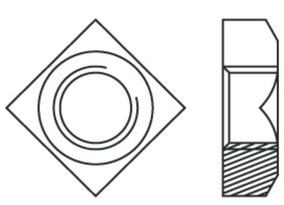	Din 557	Square Nuts
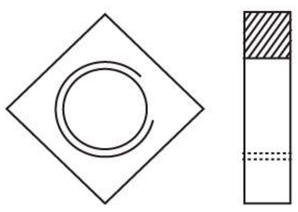	Din 562	Square Thin Nuts
	Din 571	Hexagon Head Wood Screws
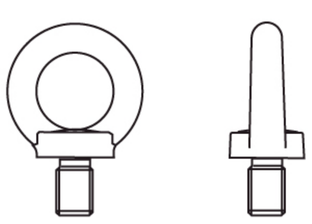	Din 580 / ISO 3266	Lifting Eye Bolts
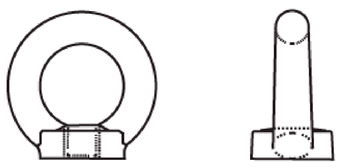	Din 582	Lifting Eye Nuts
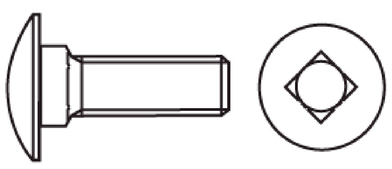	Din 603 / ISO 8677	Mushroom Head Square Neck Bolts

Type	Standard	Name
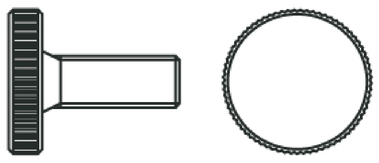	Din 653	Flat Knurled Thumb Screws
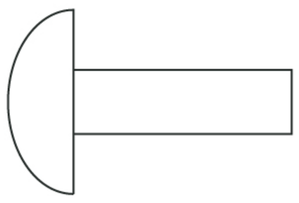	Din 660 / ISO R 1051	Round Head Rivets
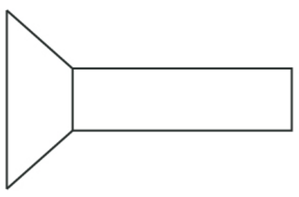	Din 661 / ISO R 1051	Countersunk Head Rivets
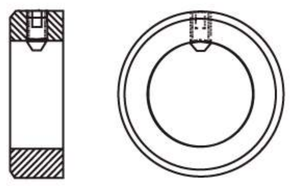	Din 705	Adjusting Rings
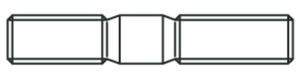	Din 835	Studs, Metal end~2d
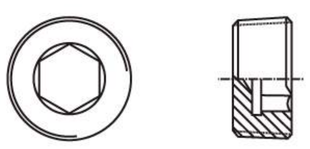	Din 906	Hexagon Socket Pipe plugs, Conical Thread
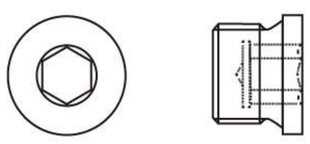	Din 908	Hexagon Socket Pipe plugs, Cylindrical Thread
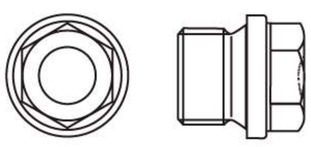	Din 910	Hexagon Head Pipe plugs, Cylindrical Threads
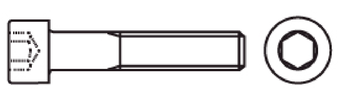	Din 912 / ISO 4762	Hexagon Socket Head Cap Screws

Type	Standard	Name
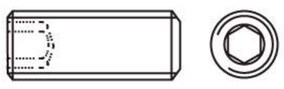	Din 913 / ISO 4026	Hexagon Socket Set Screws with Flat Point
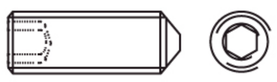	Din 914 / ISO 4027	Hexagon Socket Set Screws with Cone Point
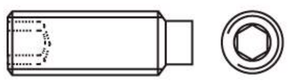	Din 915 / ISO 4028	Hexagon Socket Set Screws with Dog Point
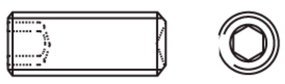	Din 916 / ISO 4029	Hexagon Socket Set Screws with Cup Point
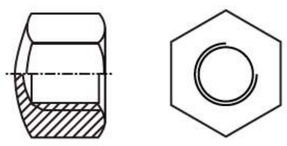	Din 917	Hexagon Cap Nuts
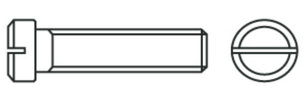	Din 920	Slotted Pan Head Screws, Small Head
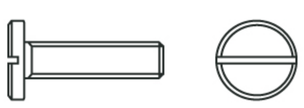	Din 921	Slotted Pan Head Screws, Large Head
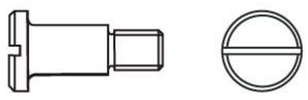	Din 923	Slotted Pan Head Screws with Shoulder
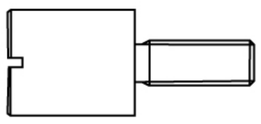	Din 927	Slotted Shoulder Screws

Type	Standard	Name
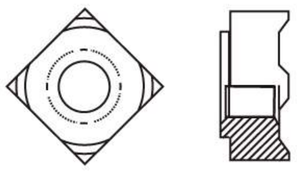	Din 928	Square Weld Nuts
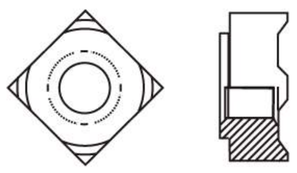	Din 929	Hexagon Weld Nuts
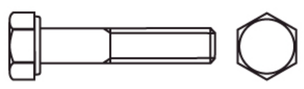	Din 931 / ISO 4014	Hexagon Head Bolts
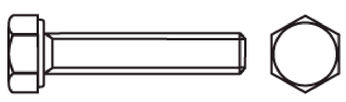	Din 933 / ISO 4017	Hexagon Head Screws
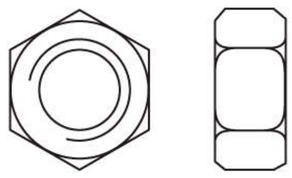	Din 934 / ISO 4032	Hexagon Nuts
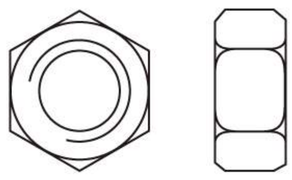	Din 934 / ISO 4032	Hexagon Nuts Left Hand Thread
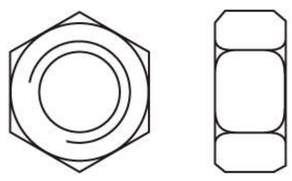	Din 934 / ISO 8673	Hexagon Nuts, Fine Pitch
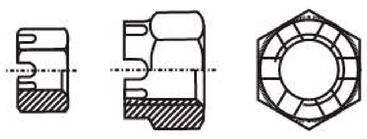	Din 935 / ISO 7035	Hexagon Castle Nuts, Slotted
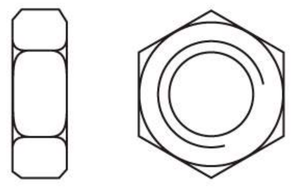	Din 936	Hexagon Thin Nuts

Type	Standard	Name
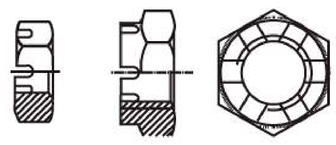	Din 937 / ISO 7038	Thin Hexagon Castle Nuts, Slotted
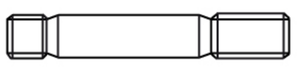	Din 938	Studs, Metal end~1d
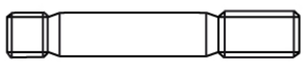	Din 939	Studs, Metal end~1, 25d
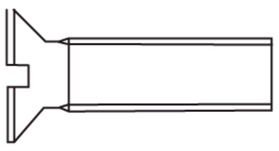	Din 963 / ISO 2009	Slotted Countersunk Head Screws
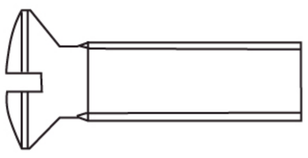	Din 964 / ISO 2010	Slotted Raised Countersunk Head Screws
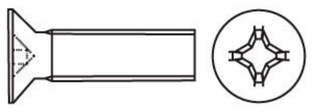	Din 965 H / ISO 7046	Cross Recessed Countersunk Head Screw-H
	Din 965 Z / ISO 7046	Cross Recessed Countersunk Head Screw-Z
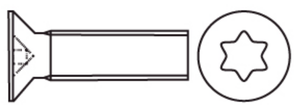	Din 965 TX / ISO 7046	Countersunk Head Screws, Six Lobe Drive
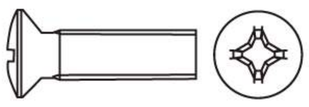	Din 966 H / ISO 7047	Cross Recessed Raised Countersunk Head Screws - H

Type	Standard	Name
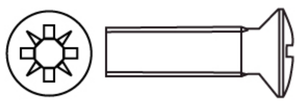	Din 966 Z / ISO 7047	Cross Recessed Raised Countersunk Head Screws - Z
	Din 975	Threaded rods
	Din 976	Threaded Rods
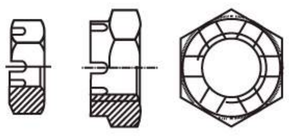	Din 979 / ISO 7038	Thin Hexagon Castle Nuts, Slotted
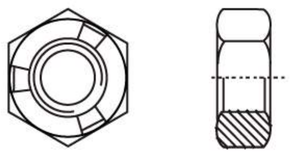	Din 980	Prevailing Torque Type Hexagon Nuts
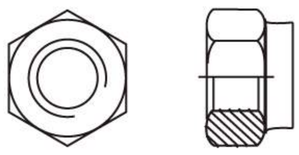	Din 982 / ISO 7040	Prevailing Torque Type Hexagon Nuts, High Type
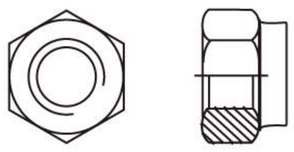	Din 985	Prevailing Torque Type Hexagon Nuts, Low Type
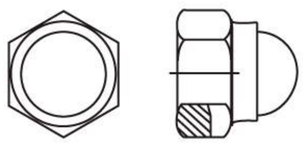	Din 986	Prevailing Torque Types Hexagon Domed Cap Nuts
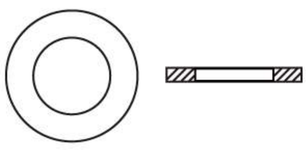	Din 988	Shim Rings and Supporting Rings

Type	Standard	Name
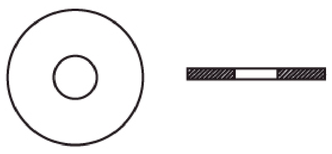	Din 1052	Washers for Wood Constructions
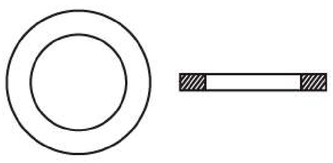	Din 1440 / ISO 8738	Washers for Clevis Pins, Finish Medium
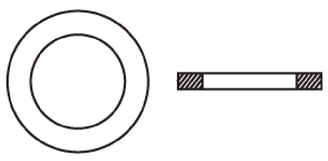	Din 1441	Washers for Clevis Pins, Finish Coarse
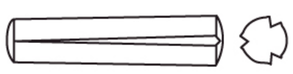	Din 1471 / ISO 8744	Grooved Pins, Full Taper Grooved
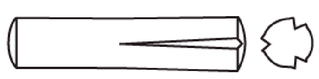	Din 1472 / ISO 8745	Grooved Pins, Half Taper Grooved
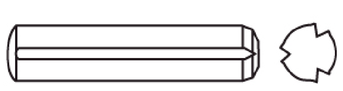	Din 1473 / ISO 8740	Grooved Pins, Full Grooved with Chamfer
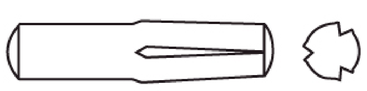	Din 1474 / ISO 8741	Grooved Pins Full Length Parallel
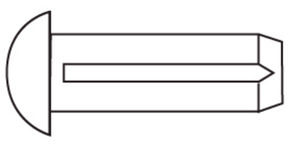	Din 1476 / ISO 8746	Grooved Pins, Round Head
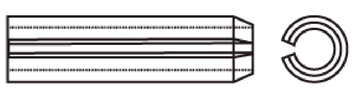	Din 1481 / ISO 8752	Spring-Type Straight Pins (Roll Pins) - Heavy Type

Type	Standard	Name
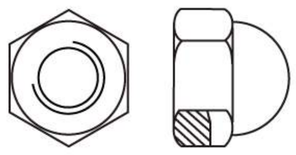	Din 1587	Hexagon Domed Cap Nuts, High Type
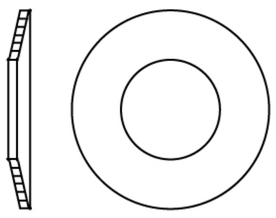	Din 2093	Disc Springs
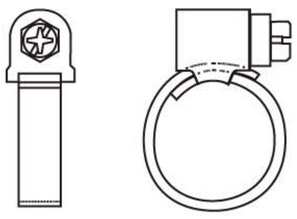	Din 3017	Hose Clamps
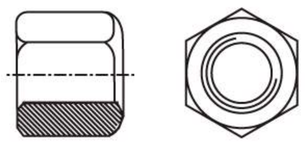	Din 6330	Hexagon Nuts 1, 5d
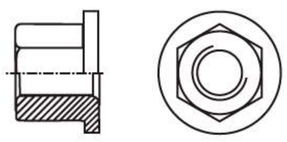	Din 6331	Hexagon Nuts 1, 5d with Coller
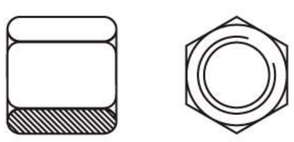	Din 6334	Hexagon Nuts, m = 3d
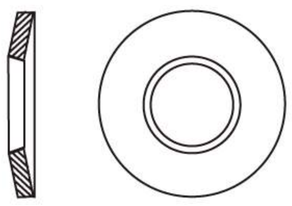	Din 6796	Conical Spring Washers for Bolted Connections
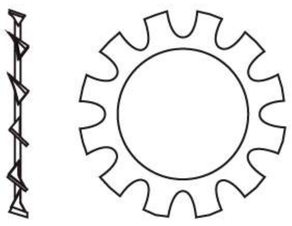	Din 6797- Form A	Toothed Lock Washers
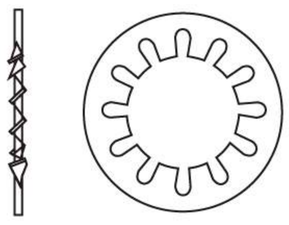	Din 6797- Form J	Toothed Lock Washers, Internal Form J

Type	Standard	Name
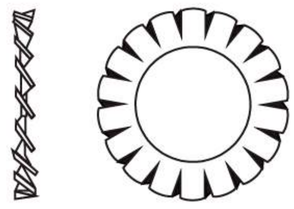	Din 6798- Form A	Serrated Lock Washers
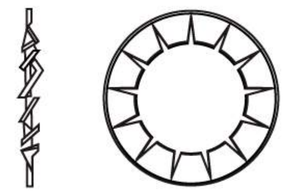	Din 6798- Form J	Serrated Lock Washers, Form J - Internal
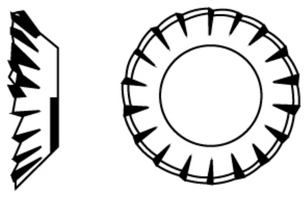	Din 6798- Form V	Serrated Lock Washers, V - Conical
	Din 6799	Retaining Washers for Shafts
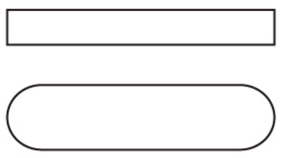	Din 6885	Parallel Keys High Type
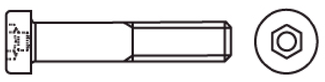	Din 6912	Socket Head Cap Screws, Low Head, Pilot Recess
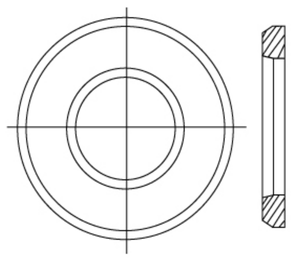	Din 6916	High-Strength Structural Washers (HV-HR)
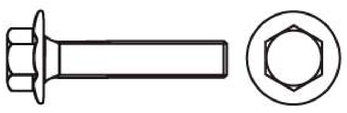	Din 6921 / ISO 4162	Hexagon Flange Bolts Metric
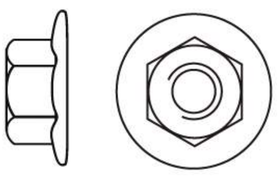	Din 6923 / ISO 4161	Hexagon Flange Nuts

Type	Standard	Name
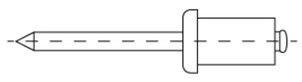	Din 7337 A	Domed Head Blind Rivets
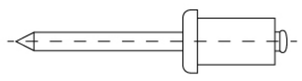	Din 7337 B	Countersunk Head Blind Rivets
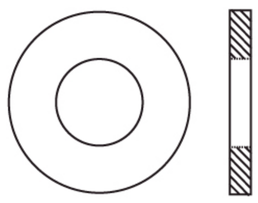	Din 7349	Washers for Bolts with Heavy Type Spring Pins
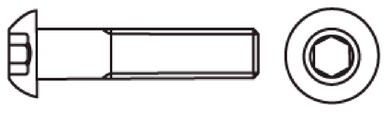	Din / ISO 7380 - 1 / TX	Button Head Screws / Six Lobe Drive
	Din / ISO 7380 - 2 / TX	Flange Button Head Socket Screws / Six Lobe Drive
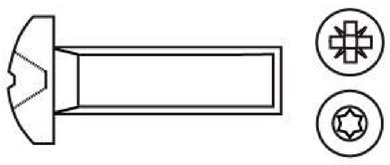	Din 7500 C	Thread Rolling Raised Cheese Head Screws - Z
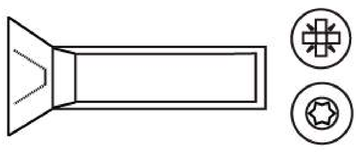	Din 7500 M	Thread Rolling Countersunk Head Screws - Z
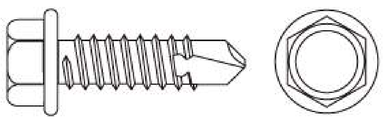	Din 7504 K	Self Drilling Screws with Hexagon Head and Flange
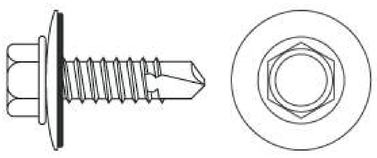	Din 7504 KO	Self Drilling Screws with Hexagon Head and Flange with Assembled Sealing Washers 16 mm

Type	Standard	Name
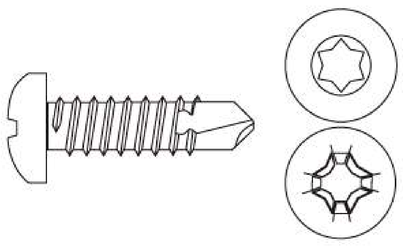	Din 7504 M / TX	Self Drilling Screws with Pan Head / Six Lobe Drive
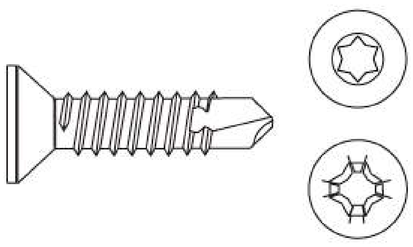	Din 7504 O / TX	Self Drilling Screws with Countersunk Head / Six Lobe Drive
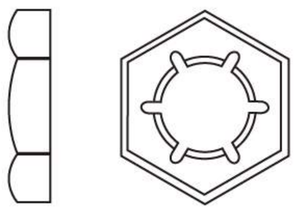	Din 7967	Self Locking Counter Nuts (Pal Nuts)
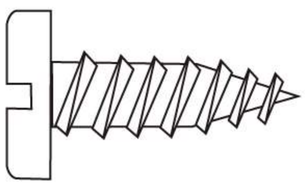	Din 7971 / ISO 1481	Slotted Pan Head Tapping Screws
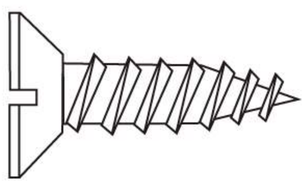	Din 7972 / ISO 1482	Slotted Countersunk Head Tapping Screws
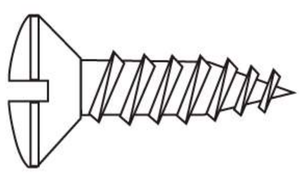	Din 7973 / ISO 1483	Slotted Raised Countersunk Head Tapping Screws
	Din 7976 / ISO 1479	Hexagon Head Tapping Screws
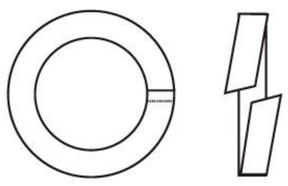	Din 7980	Spring Lock Washers for Screws with Cylindrical Heads
	Din 7981 C - H / ISO 7049	Cross Recessed Pan Head Tapping Screws - H

Type	Standard	Name
	Din 7981 C - Z / ISO 7049	Cross Recessed Pan Head Tapping Screws - Z
	Din 7981 TX / ISO 7049	Pan Head Tapping Screws, Six Lobe Drive
	Din 7982 C - H / ISO 7050	Cross Recessed Countesunk Head Tapping Screws - H
	Din 7982 C- Z / ISO 7050	Cross Recessed Countesunk Head Tapping Screws - Z
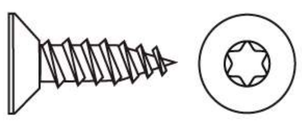	Din 7982 TX / ISO 7050	Countersunk Head Tapping Screws, Six Lobe Drive
	Din 7983 C - H / ISO 7051	Cross Recessed Raised Countersunk Head Tapping Screws - H
	Din 7983 C - Z / ISO 7051	Cross Recessed Raised Countersunk Head Tapping Screws - Z
	Din 7983 TX / ISO 7051	Raised Countersunk Head Tapping Screws Six Lobe Drive
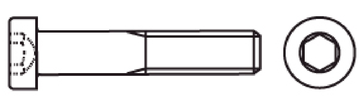	Din 7984	Hexagon Socket Head Cap Screws with Low Head

Type	Standard	Name
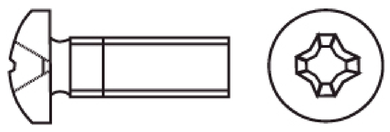	Din 7985 H / ISO 7045	Cross Recessed Raised Cheese Head Screws - H
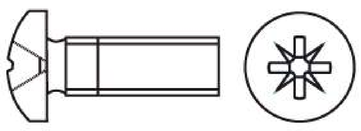	Din 7985 Z / ISO 7045	Cross Recessed Raised Cheese Head Screws - Z
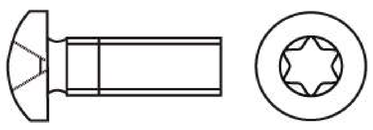	Din 7985 TX / ISO 7045	Pan Head Screws, Six Lobe Drive
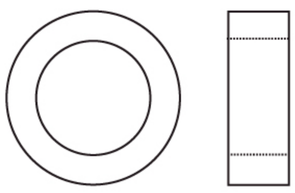	Din 7989	Washers for Steel Constructions
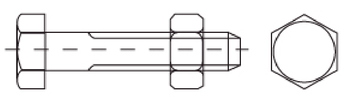	Din 7990	Hexagon Head Bolts with Hexagon Nut.
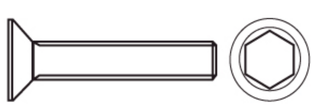	Din 7991	Hexagon Socked Countersunk Head Screws
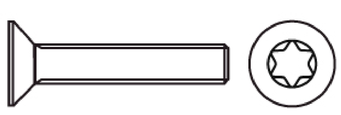	Din 7991 TX	Countersunk Head Screws, Six Lobe Drive
	Din 7995	Cross Recessed Raised Countersunk Head Wood Screws - Z
	Din 7996	Cross Recessed Round Head Wood Screws - Z

Type	Standard	Name
	Din 7997	Cross Recessed Raised Countersunk Head Wood Screws - Z
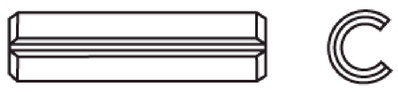	Din 8752	Slotted Spring Pins, Heavy Duty
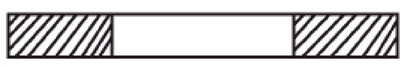	Din 9021 / ISO 7092	Washers with Outer Diameter ~ 3 x Nominal Thread Diameter
	Din 11024	Cotter Pins, Type " β"
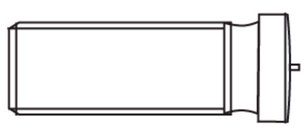	Din 32501/3 / ISO 13918	Welding Bolts
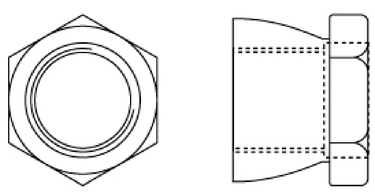	S M F 01	Break / Shear Nuts
	S M F 02	Break Bolts
	S M F 03	Break Screws
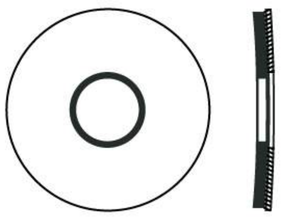	S M F 04	EPDM washer

Type	Standard	Name
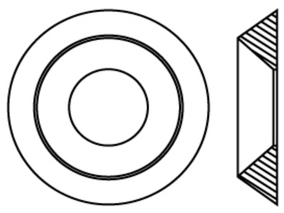	S M F 05	Conical Washer
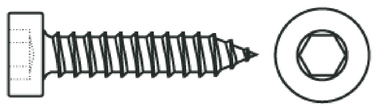	S M F 06	Hex Socket with Selftaping Threads
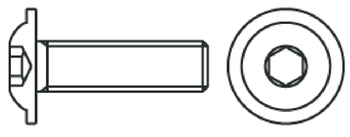	S M F 07	Screw with Flange Head and Hex Socket
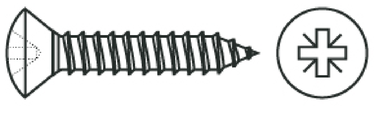	S M F 08	Wood Screw with a Countersunk Head with PZ Cross Socket
	S M F 09	Wood Screw with Cone, with PZ Cross Socket Full Threaded
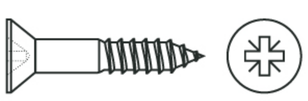	S M F 10	Wood Screw with a Countersunk Head, with PZ Cross Socket with Partial Thread
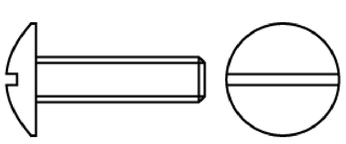	S M F 11	Bolt with a Large Mushroom Head, with Slotted
	S M F 12	Wood Screw with Rounded Head, with PZ Cross Socket
	S M F 13	Wood Screw with a Countersunk Head, with Longer Thread, with TORX Socket

Type	Standard	Name
	S M F 14	Wood Screw with a Countersunk Head, with Longer Thread, with TORX Socket
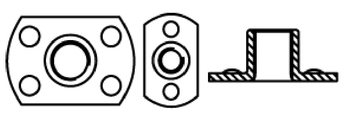	S M F 15	Welded Nut
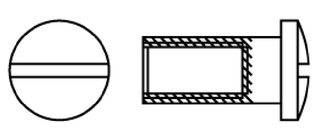	S M F 16	Sleeve Nut
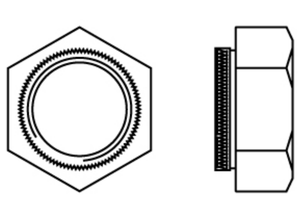	S M F 17	Hexagon Knurled Nut
	S M F 18	Dowel Screw
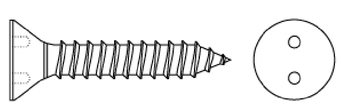	S M F 19	Countersunk Screw with Special Holes on the Head
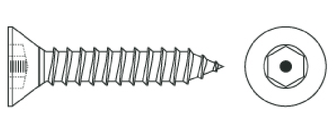	S M F 20	Security Screw Countersunk Head
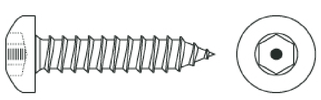	S M F 21	Security Screw Button Head with Selftapping Thread (Type AB)
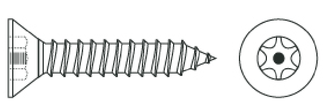	S M F 22	Security Screw with Countersunk Head

Type	Standard	Name
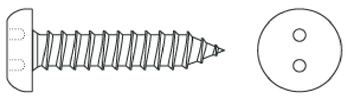	S M F 23	Pan Head Screw with Special Holes on the Head
	S M F 24	Wood Screw with Torx Socket Pan Head
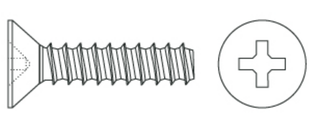	S M F 25	Plastite Screw with Countersunk Head
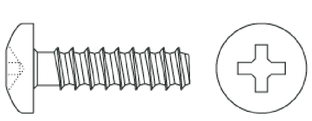	S M F 26	Plastite Screw with Pan Head
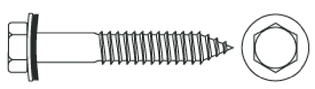	S M F 27	Selftapping Screws with Hexagonal Head and EPDM Washer, Form A
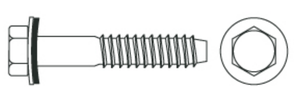	S M F 28	Selftapping Screws with Hexagon Head and EPDM Washer, BZ Form
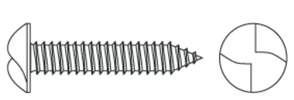	S M F 29	Special Security Screw Sleftapping, Form A
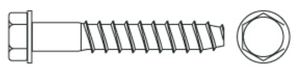	S M F 30	Concrete Bolt with Hexagonal Shank
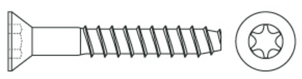	S M F 31	Concrete Screw with Conical Head and TORK Socket

Type	Standard	Name
	S M F 32	Double Thread for Fixing Solar panels
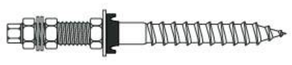	S M F 33	Double-Threaded set Complete with DIN 125, DIN 9021, DIN 934
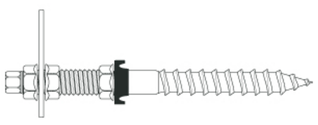	S M F 34	Double Thread Included with Din 6923
	S M F 35	Double Thread Included with DIN 6923
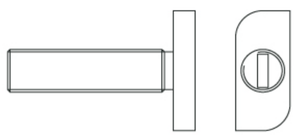	S M F 36	Hammer Head Screw for Profile Type 28/15
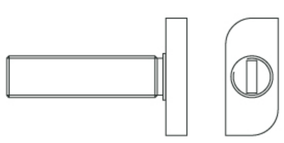	S M F 37	Hammer Head Screw with Square Pin Type 28/15
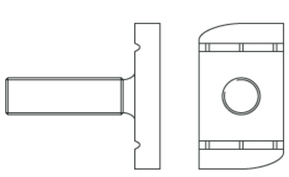	S M F 38	Hammer Head Screw with Square Spigot Type 41/41
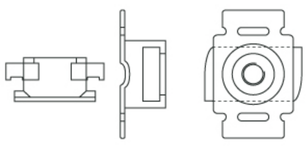	S M F 39	Profile Nut with Protection Type 41/41
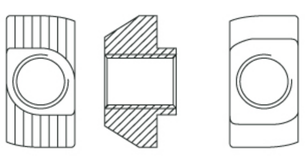	S M F 40	Hammer Nut

Type	Standard	Name
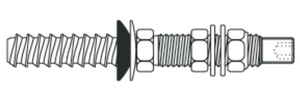	S M F 41	Double Thread for attaching Solar Panels to Steel Constructions with Rubber Pads for Corrugated Sheets
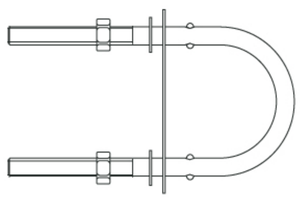	S M F 42	U Bolt
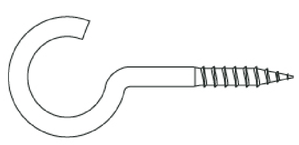	S M F 43	Clothes-line-hooks
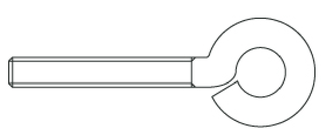	S M F 44	Eyebolt
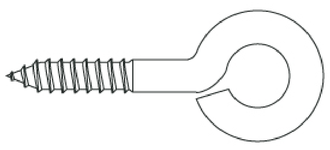	S M F 45	Eyebolt for Wood
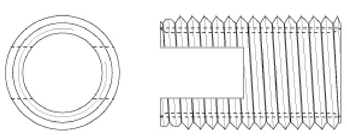	S M F 46	Selftapping Insert
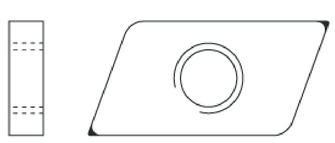	S M F 47	Threaded Plate, type 28/15
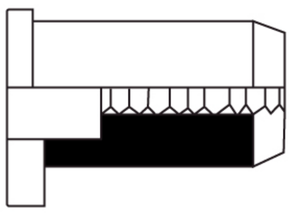	S M F 48	Blind Rivet Nut Flat Head
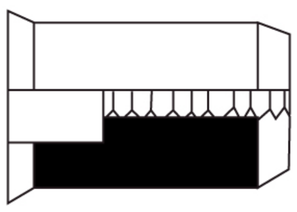	S M F 49	Blind Rivet Nut Reduce Head

Type	Standard	Name
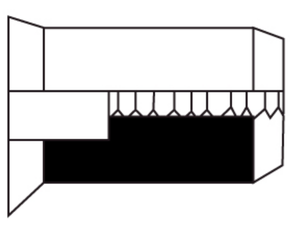	S M F 50	Blind Rivet Nut Countersunk Head
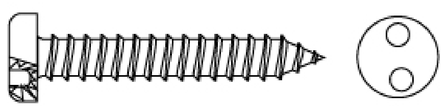	S M F 51	Cheese Head Security Selftapping Screws with Two Hole Drive
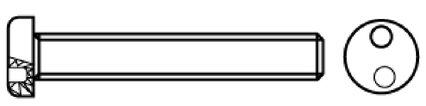	S M F 52	Cheese Head Security Screws with two Hole Drive
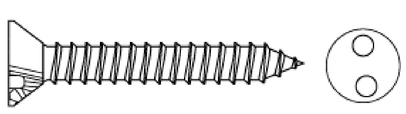	S M F 53	Counersunk Head Security Selftapping Screws with Two Hole Drive
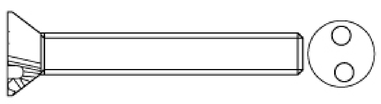	S M F 54	Counersunk Head Security Screws with Two Hole Drive
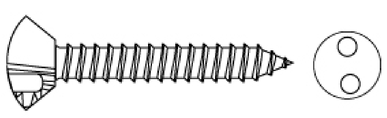	S M F 55	Raised CSK Selftapping Head Security Screws Two Hole Drive
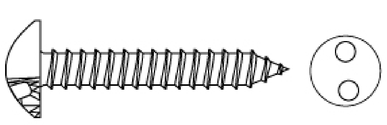	S M F 56	Pan Head Selftapping Security Screws with Two Hole Drive
	S M F 57	Buttton Head Selftapping Security Screws Hex Socket Drive + Pin
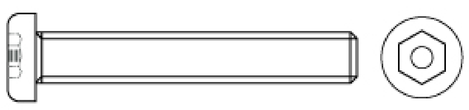	S M F 58	Buttton Head Security Screws Hex Socket Drive + Pin

Type	Standard	Name
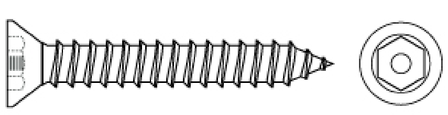	S M F 59	CSK Head Security Screws Hex Socket Drive + Pin
	S M F 60	CSK Head Security Screws Hex Socket Drive + Pin
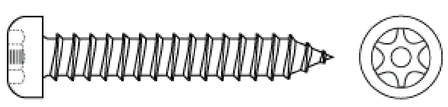	S M F 61	Button Security Screws Six Lobe Drive + Pin
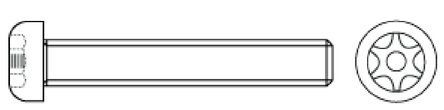	S M F 62	Button Security Screws Six Lobe Drive + Pin
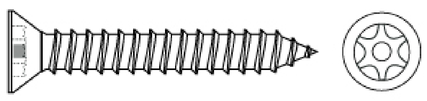	S M F 63	CSK Head Security Screws with Six Lobe Drive + PIn
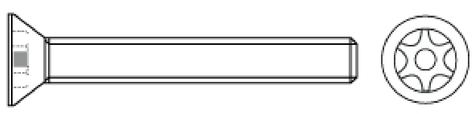	S M F 64	CSk Head Security Screws with Six Lobe Drive + Pin
	S M F 65	Wedge Anchor
	S M F 66	Studbolts ASTM A193
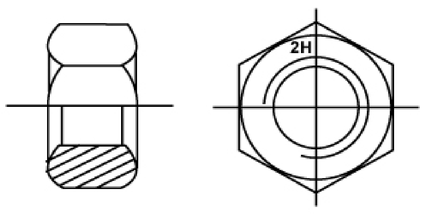	S M F 67	Hex Nuts ASTM A194 Grade 2H

Type	Standard	Name
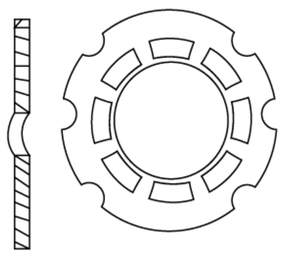	S M F 68	Direct Tension Indicator
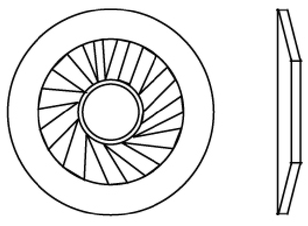	S M F 69	Contact-Lock Washers - Type L
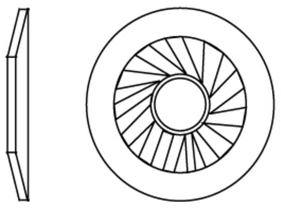	S M F 70	Contact-Lock Washers - Type M
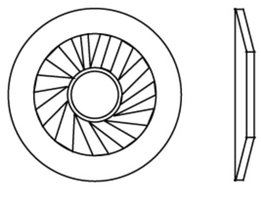	S M F 71	Contact-Lock Washers - Type Z
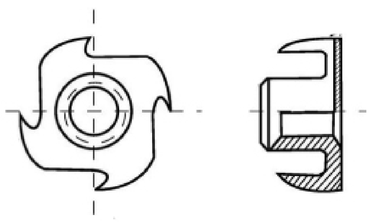	S M F 72	Drive-in Nuts for Wood
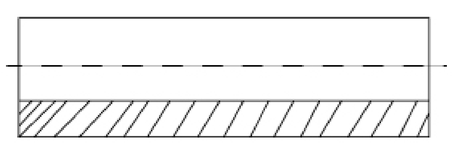	S M F 73	Round Connection Nuts
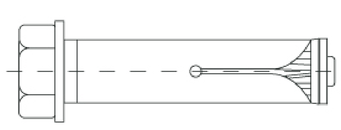	S M F 74	Sleeve Anchors - Bolts
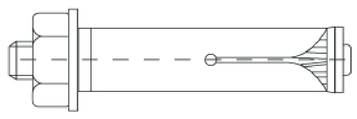	S M F 75	Sleeve Anchors - Rod
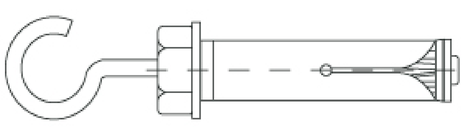	S M F 76	Sleeve Anchors - Open Eye Bolt

Type	Standard	Name
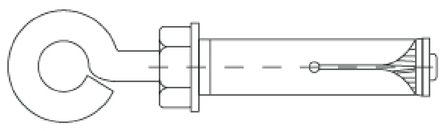	S M F 77	Sleeve Anchors - Eye Bolt
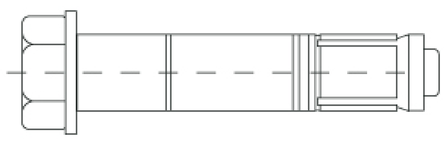	S M F 78	Highload Anchors - Bolt Type
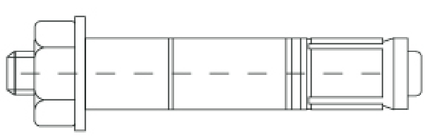	S M F 79	Highload Anchors - Stud Type
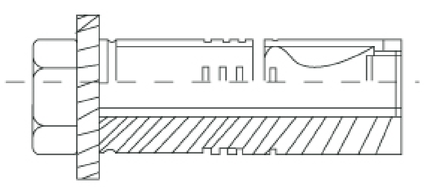	S M F 80	Expanding Shells- Bolts Type - Zamak
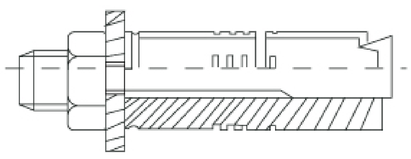	S M F 81	Expanding Shells- Rod Type - Zamak
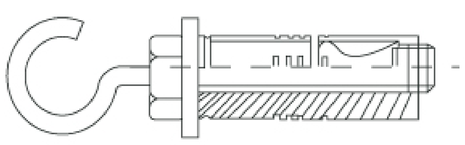	S M F 82	Expanding Shells with Open Eye Bolt - Zamak
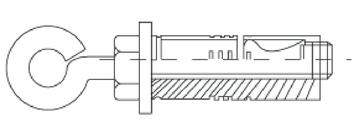	S M F 83	Expanding Shells with Eye Bolt - Zamak
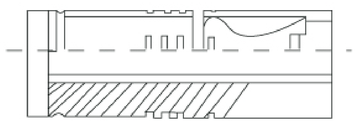	S M F 84	Expanding Shells - Zamak
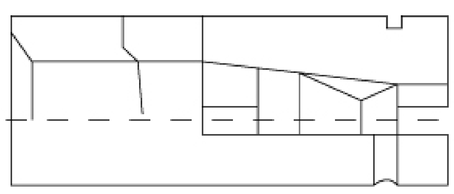	S M F 85	Drop-in Anchors

Type	Standard	Name
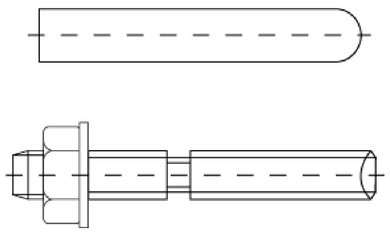	S M F 86	Resin Capsules
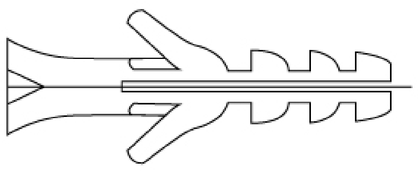	S M F 87	Wall Plugs - Nylon - Grey Colour

Taper Pins

DIN 1 / ISO 2339

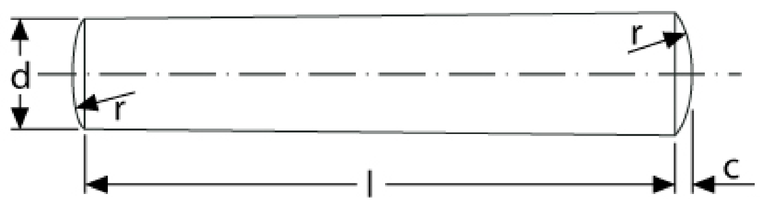

d	1	1,5	2	2,5	3	4	5	6	8	10
c	0,15	0,23	0,30	0,4	0,45	0,60	0,75	0,90	1,20	1,50
r	1,0	1,5	2,0	2,5	3,0	4,0	5,0	6,0	8,0	10,0
l	Range from 8 to 120									

Parallel Pins

DIN 7 / ISO 2338

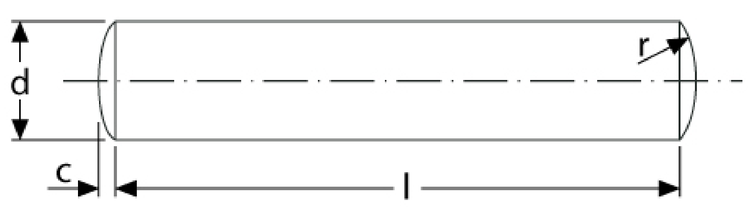

d	0,8	1	1,5	2	2,5	3	4	5	6	8	10	12	14	16	20
c	0,13	0,15	0,23	0,30	0,40	0,45	0,60	0,75	0,90	1,20	1,50	1,80	2,00	2,50	3,00
r	0,8	1,0	1,5	2,0	2,5	3,0	4,0	5,0	6,0	8,0	10,0	12,0	14,0	16,0	20,0
l	Range from 3 to 100														

Slotted Cheese Head Screws

DIN 84 / ISO 1207

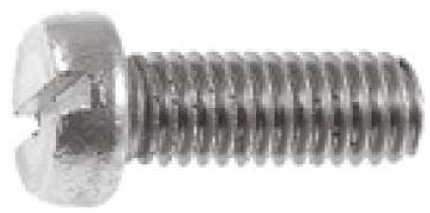

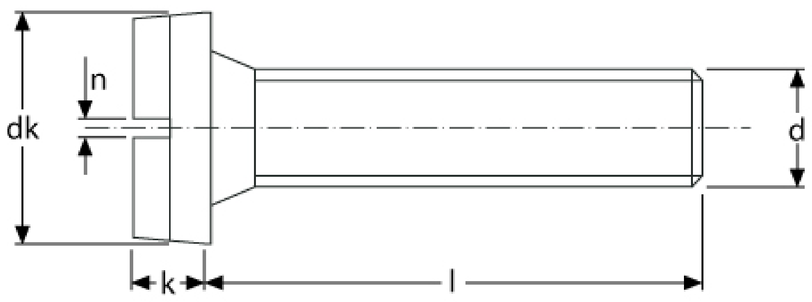

d	M1	M1,2	M1,4	M1,6	M1,7	M2	M2,3	M2,5	M2,6	M3	M3,5	M4	M5	M6	M8	M10
n	0,3	0,4	0,5	0,6	0,6	0,6	0,6	0,6	0,6	0,8	1,0	1,2	1,2	1,6	2,0	2,5
dk	2,0	2,3	2,6	3,0	3,4	3,8	4,4	4,5	5,0	5,5	6,0	7,0	8,5	10,0	13,0	16,0
k	0,7	0,8	0,9	1,0	1,2	1,3	1,5	1,6	1,7	2,0	2,4	2,6	3,3	3,9	5,0	6,0
l	Range from 2 to 120															

Slotted Pan Head Screws

DIN 85 / ISO 1580

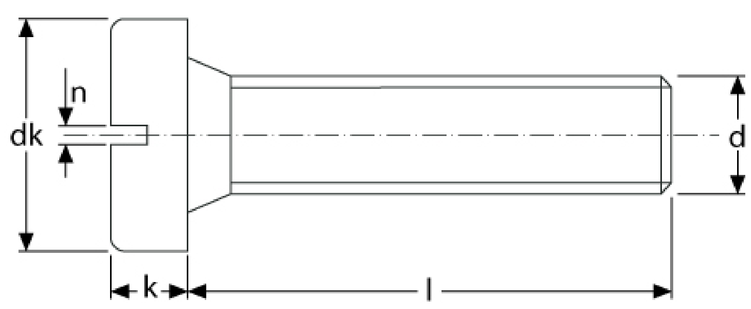

d	M1,6	M2	M2,5	M3	M3,5	M4	M5	M6	M8
n	0,4	0,5	0,6	0,8	1,0	1,2	1,2	1,6	2,0
dk	3,2	4,0	5,0	6,0	7,0	8,0	10,0	12,0	16,0
k	1,0	1,3	1,5	1,8	2,1	2,4	3,0	3,6	4,8
l	Range from 3 to 100								

Tabwashers with Tab 1

DIN 93

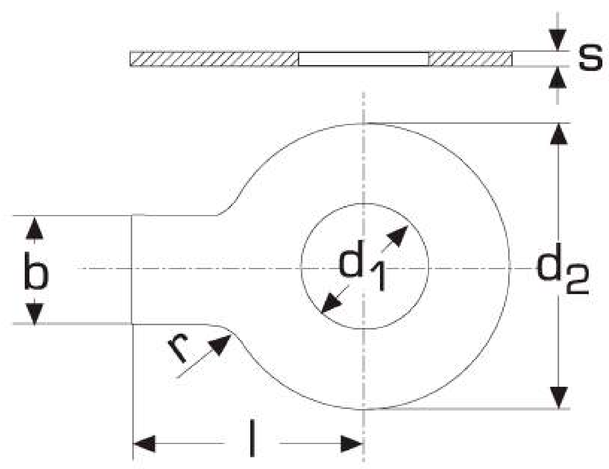

for thread	d1	d2	b	l	s	r
M 4	4,3	14	5	14	0,38	2,5
M 5	5,3	17	6	16	0,50	2,5
M6	6,4	19	7	18	0,50	4,0
M 8	8,4	22	8	20	0,75	4,0
M 10	10,5	26	10	22	0,75	4,0
M 12	13,0	30	12	28	1,00	6,0
M 14	15,0	33	12	28	1,00	10,0
M 16	17,0	35	15	32	1,00	10,0
M 18	19,0	40	18	36	1,00	10,0
M 20	21,0	42	18	36	1,00	10,0
M 22	23,0	50	20	42	1,00	10,0
M 24	25,0	50	20	42	1,00	10,0
M 27	28,0	58	23	48	1,60	10,0
M 30	31,0	63	26	52	1,60	16,0
M 33	34,0	68	28	56	1,60	16,0
M 36	37,0	75	30	60	1,60	16,0
M 39	40,0	82	32	64	1,60	16,0

Split Pins

DIN 94 / ISO 1234

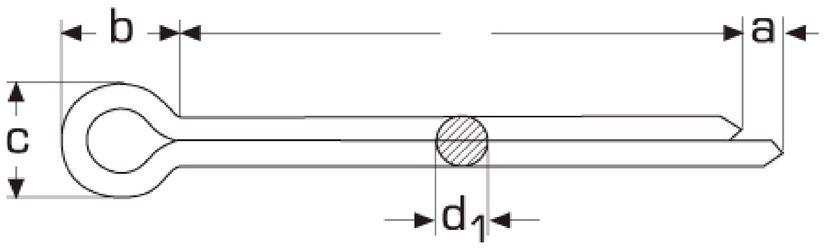

d1	1	1,2	1,6	2	2,5	3,2	4	5	6,3	8	10
a	1,6	2,5	2,5	2,5	2,5	3,2	4,0	4,0	4,0	4,0	6,3
b	3,0	3,0	3,2	4,0	5,0	6,4	8,0	10,0	12,6	16,0	20,0
c	1,6	1,7	2,4	3,2	4,0	5,1	6,5	8,0	10,3	13,1	16,6
l	Range from 4 to 100										

Slotted Raised Countersunk Head Wood Screws

DIN 95

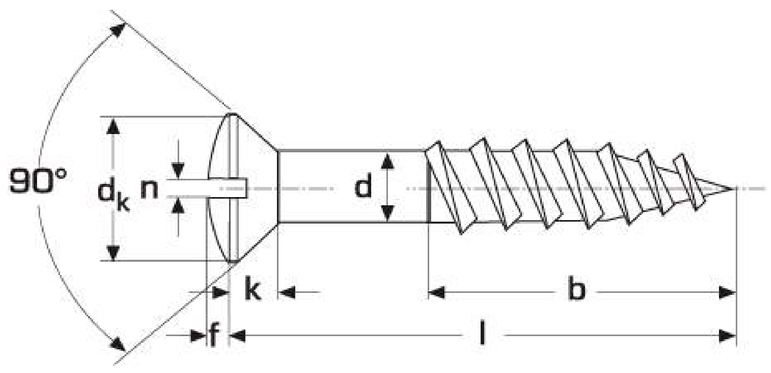

d1	2,5	3	3,5	4	4,5	5	5,5	6	7	8
dk	4,7	5,6	6,5	7,5	8,3	9,2	10,2	11,0	12,5	14,5
k	1,5	1,65	1,93	2,2	2,35	2,5	2,75	3,0	3,5	4,0
n	0,6	0,8	0,8	1,0	1,0	1,2	1,2	1,6		2,0
f~	0,6	0,75	0,9	1,0	1,1	1,25	1,4	1,5		2,0
l	Range from 10 to 120									

Slotted Round Head Wood Screws

DIN 96

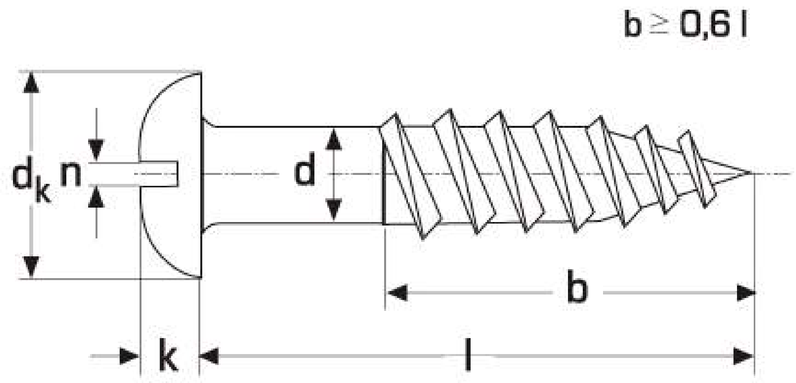

d	2,5	3	3,5	4	4,5	5	5,5	6	7	8
dk	5	6	7	8	9	10	11	12	14	16
k	1,7	2,1	2,4	2,8	3,1	3,5	3,8	4,2	4,9	5,6
n	1,6	2,5	2,5	2,5	2,5	3,2	4,0	4,0	4,0	4,0
l	Range from 10 to 120									

Slotted Countersunk Head Wood Screws

DIN 97

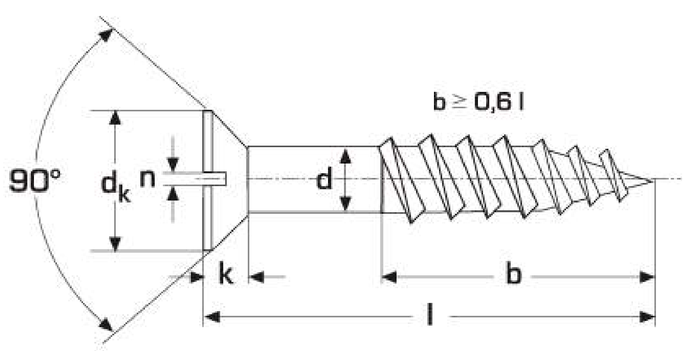

d	2,5	3	3,5	4	4,5	5	5,5	6	7	8	10
dk	4,7	5,6	6,5	7,5	8,3	9,2	10,2	11,0	12,5	14,5	18,0
k	1,5	1,65	1,93	2,2	2,35	2,5	2,75	3,0	3,5	4,0	5,0
n	0,6	0,8	0,8	1,0	1,0	1,2	1,2	1,6		2,0	
l	Range from 10 to 150										

Plain Washers

DIN 125 A / ISO 7089

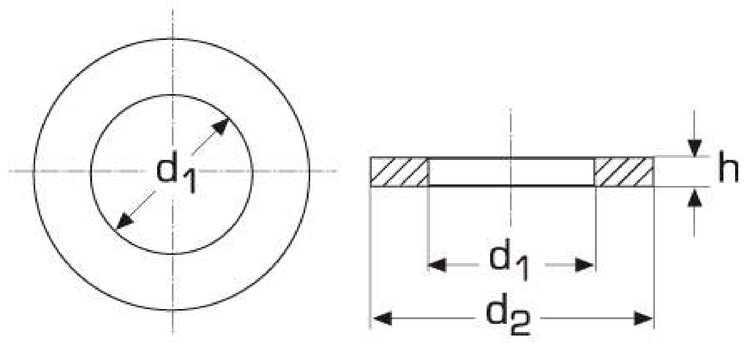

for thread	d1	d2	h
M 1,6	1,7	4,0	0,3
M 1,7	1,8	4,5	0,3
M 2	2,2	5,0	0,3
M 2,3	2,5	6,0	0,5
M 2.5	2,7	6,0	0,5
M 2,6	2,8	7,0	0,5
M 3	3,2	8,0	0,5
M 3,5	3,7	8,0	0,5
M 4	4,3	8,0	0,8
M 5	5,3	10,0	1,0
M 6	6,4	12,0	1,6
M 7	7,4	14,0	1,6
M 8	8,4	16,0	1,6
M 10	10,5	20,0	2,0
M 12	13,0	24,0	2,5
M 14	15,0	28,0	2,5
M 16	17,0	30,0	3,0
M 18	19,0	34,0	3,0
M 20	21,0	37,0	3,0
M 22	23,0	39,0	3,0
M 24	25,0	44,0	4,0
M 27	28,0	50,0	4,0
M 30	31,0	56,0	4,0
M 33	34,0	60,0	5,0
M 36	37,0	66,0	5,0
M 39	40,0	72,0	6,0
M 42	43,0	75,0	7,0
M 45	46,0	85,0	7,0
M 48	50,0	92,0	8,0
M 50	52,0	92,0	8,0
M 52	54,0	98,0	8,0

Spring Lock Washers
Form A

DIN 127 A

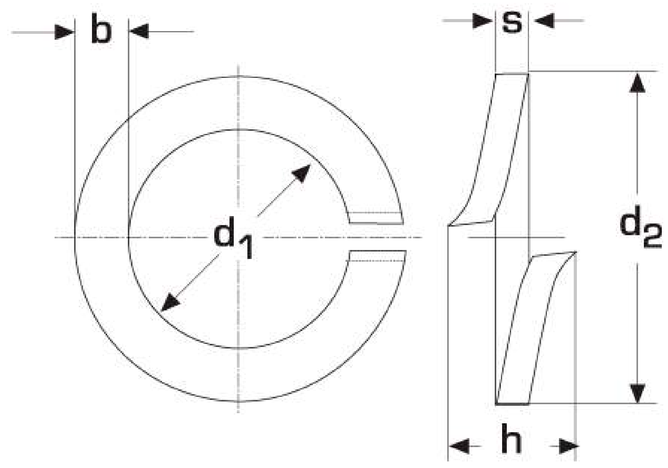

for thread	d1	d2	h	s	b
M 3	3,1	6,2	1,9	0,8	1,3
M 3,5	3,6	6,7	1,9	0,8	1,3
M 4	4,1	7,6	2,1	0,9	1,5
M 5	5,1	9,2	2,7	1,2	1,8
M 6	6,1	11,8	3,6	1,6	2,5
M 7	7,1	12,8	3,6	1,6	2,5
M 8	8,1	14,8	4,6	2,0	3,0
M 10	10,2	18,1	5,0	2,2	3,5
M 12	12,2	21,1	5,8	2,5	4,0
M 14	14,2	24,1	6,8	3,0	4,5
M 16	16,2	27,4	7,8	3,5	5,0
M 20	20,2	33,6	8,8	4,0	6,0
M 24	24,5	40,0	11,0	5,0	7,0
M 27	27,5	43,0	11,0	5,0	7,0
M 30	30,5	48,0	13,6	6,0	8,0

SRISHAA
MACHINED FASTENERS PVT.LTD.

Spring Lock Washers
Form B

DIN 127 B

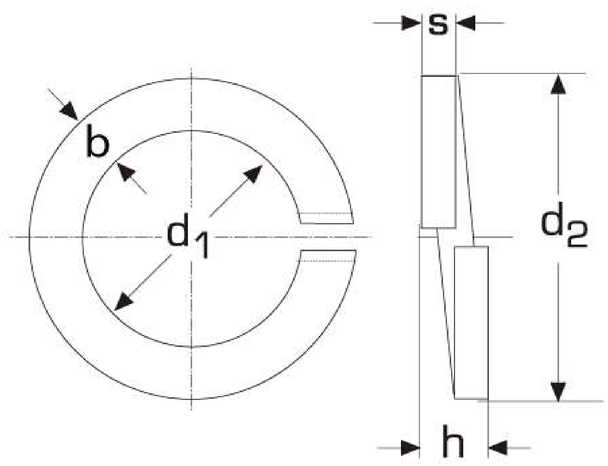

for thread	d1	d2	h	s	b
M 2	2,1	4,4	1,0	0,5	0,9
M 2,3	2,3	4,8	1,4	0,6	1,0
M 2,5	2,6	5,1	1,4	0,6	1,0
M 3	3,1	6,2	1,6	0,8	1,3
M 3,5	3,5	6,7	1,8	0,8	1,3
M 4	4,1	7,6	1,8	0,9	1,5
M 5	5,1	9,2	2,4	1,2	1,8
M 6	6,1	11,8	3,2	1,6	2,5
M 7	7,1	12,8	3,2	1,6	2,5
M 8	8,1	14,8	4,0	2,0	3,0
M 10	10,2	18,1	4,4	2,2	3,5
M 12	12,2	21,1	5,0	2,5	4,0
M 14	14,2	24,1	6,0	3,0	4,5
M 16	16,2	27,4	7,0	3,5	5,0
M 18	18,2	29,4	7,0	3,5	5,0
M 20	20,2	33,6	8,0	4,0	6,0
M 22	22,5	35,9	8,0	4,0	6,0
M 24	24,5	40,0	10,0	5,0	7,0
M 27	27,5	43,0	10,0	5,0	7,0
M 30	30,5	48,2	12,0	6,0	8,0
M 33	33,5	48,2	12,0	6,0	8,0
M 36	36,5	58,2	12,0	6,0	10,0
M 39	39,5	61,2	12,0	6,0	10,0
M 42	42,5	68,2	14,0	7,0	12,0
M 45	45,5	71,2	14,0	7,0	12,0
M 48	49,0	75,0	14,0	7,0	12,0

Curved Spring Lock Washers Form A

DIN 128 A

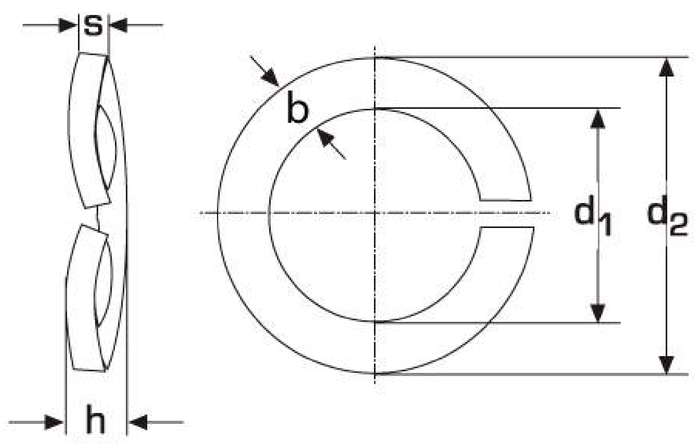

for thread	d1	d2	h	s	b
M 2	2,1	4,4	0,7	0,5	0,9
M 2,5	2,6	5,1	0,9	0,6	1,0
M 3	3,1	6,2	1,1	0,7	1,3
M 3,5	3,6	6,7	1,1	0,7	1,3
M 4	4,1	7,6	1,2	0,8	1,5
M 5	5,1	9,2	1,5	1,0	1,8
M 6	6,1	11,8	2,0	1,3	2,5
M 8	8,1	14,8	2,45	1,6	3,0
M 10	10,2	16,1	2,85	1,8	3,5
M 12	12,2	21,1	3,35	2,1	4,0
M 14	14,2	24,1	3,9	2,4	4,9
M 16	16,2	27,4	4,5	2,8	5,0
M 18	18,2	29,4	4,5	2,8	5,0
M 20	20,2	33,6	5,1	3,2	6,0
M 22	22,5	35,9	5,1	3,2	6,0
M 24	24,5	40,0	6,5	4,0	7,0

Curved Spring Lock Washers Form B

DIN 128 B

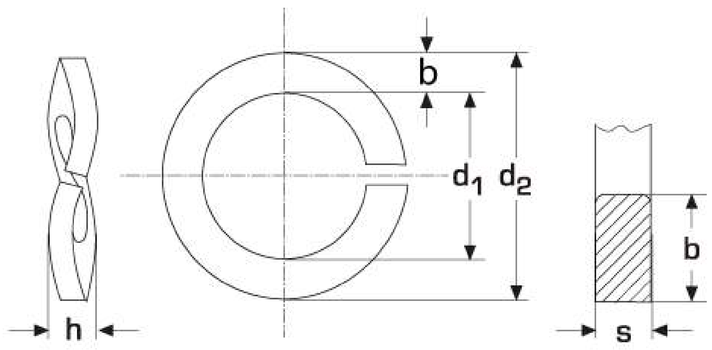

for thread	d1	d2	h min	h max	s	b
M 5	5,1	9,2	1,50	1,70	1,0	1,8
M 6	6,1	11,8	2,00	2,20	1,3	2,5
M 8	8,1	14,8	2,45	2,75	1,6	3,0
M 10	10,2	18,1	2,85	3,15	1,8	3,5
M 12	12,2	21,1	3,35	3,65	2,1	4,0
M 16	16,2	27,4	4,50	5,10	5,1	5,0

SRISHAA
MACHINED FASTENERS PVT.LTD.

Curved Spring Washers
Form A

DIN 137 A

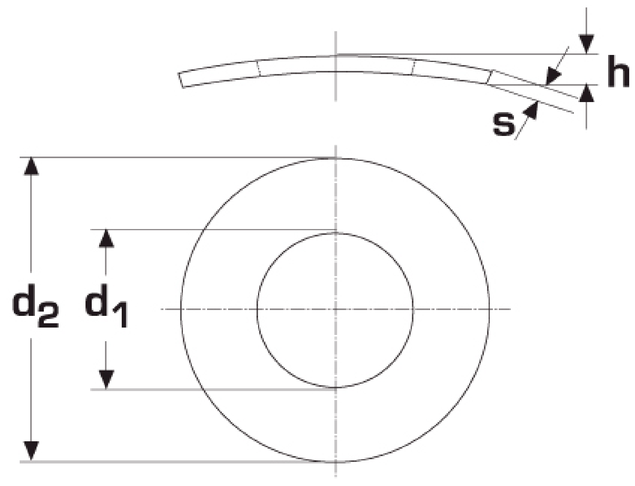

for thread	d1	d2	h min	h max	s
M 1,4	1,5	3,0	0,40	0,80	0,25
M 1,6	1,8	4,0	0,45	0,90	0,25
M 2	2,2	4,5	0,50	1,00	0,30
M 2,3	2,5	5,0	0,50	1,00	0,30
M 2,5	2,6	5,5	0,55	1,10	0,30
M 2,6	2,8	5,5	0,55	1,10	0,30
M 3	3,2	6,0	0,65	1,30	0,40
M 3,5	3,7	7,0	0,70	1,40	0,40
M 4	4,3	8,0	0,80	1,60	0,50
M 5	5,3	10,0	0,90	1,80	0,50
M 6	6,4	11,0	1,10	2,20	0,50
M 7	7,4	12,0	1,20	2,40	0,50
M 8	8,4	15,0	1,70	3,40	0,50
M 10	10,5	18,0	2,00	4,00	0,80

Wave Spring Washers
Form B

DIN 137 B

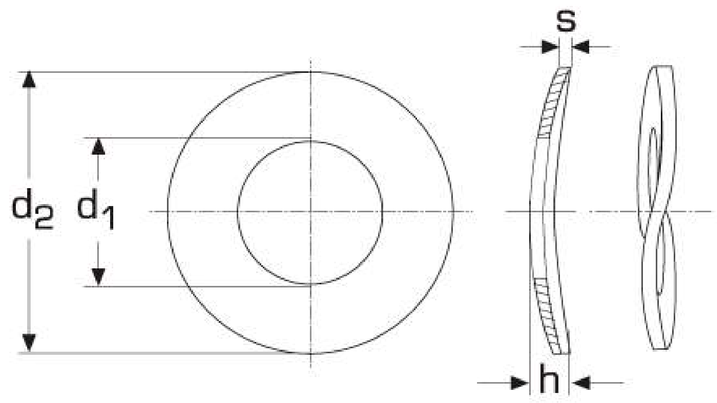

for thread	d1	d2	h min	h max	s
M 3	3,2	8,0	0,8	1,6	0,5
M 3,5	3,7	8,0	0,9	1,8	0,5
M 4	4,3	9,0	1,0	2,0	0,5
M 5	5,3	11,0	1,1	2,2	0,5
M 6	6,4	12,0	1,3	2,6	0,5
M 7	7,4	14,0	1,5	3,0	0,8
M 8	8,4	15,0	1,5	3,0	0,8
M 10	10,5	21,0	2,1	4,2	1,0
M 12	13,0	24,0	2,5	5,0	1,2
M 14	15,0	28,0	3,0	6,0	1,6
M 16	17,0	30,0	3,2	6,4	1,6
M 18	19,0	34,0	3,3	6,6	1,6
M 20	21,0	36,0	3,7	7,4	1,6
M 22	23,0	40,0	3,9	7,8	1,8
M 24	25,0	44,0	4,1	8,2	1,8
M 27	28,0	50,0	4,7	9,4	2,0

T-Head bolts with square neck Head

DIN 186

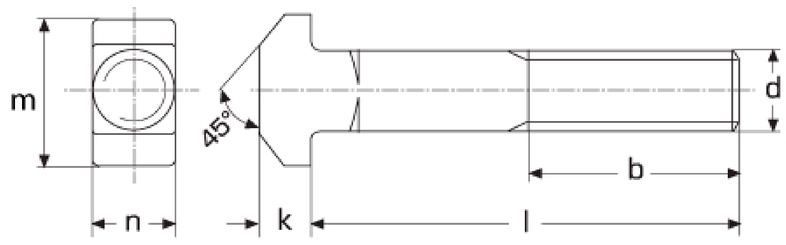

d	M 8	M 10	M 12	M 16	M 20
b	22,0	26,0	30,0	38,0	46,0
k	5,5	7,0	8,0	10,5	13,0
n	8,0	10,0	12,0	16,0	20,0
m	18,0	21,0	26,0	30,0	36,0
l	Range from 30 to 120				

Wing Nuts, American Type

DIN 315 A

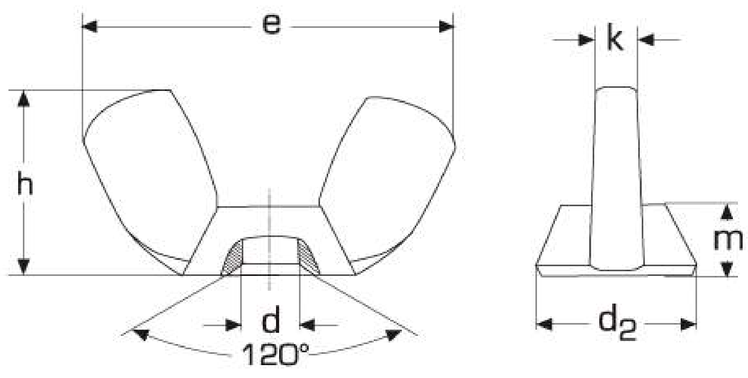

d	M 3	M 4	M 5	M 6	M 8	M 10	M 12	M 14	M 16	M 18	M 20
m	3,0	3,0	4,0	4,9	5,4	6,3	7,9	10,6	10,6	12,2	12,2
h	8,8	8,8	10,5	12,9	14,8	17,3	22,3	30,8	30,8	31,2	31,2
d2	7,8	7,8	9,5	11,9	13,5	15,3	20,5	25,0	25,0	29,3	29,3
k	2,0	2,0	2,6	3,0	3,3	4,0	5,0	6,5	6,5	7,2	7,5
e	18,5	18,5	22,0	26,8	30,3	35,3	47,5	65,0	65,0	66,5	66,5

Wing Nuts

DIN 315

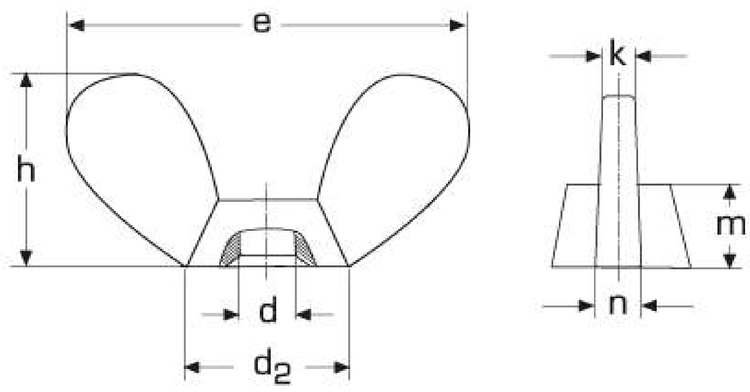

d	M 4	M 5	M 6	M 8	M 10	M 12	M 14	M 16	M 20
k	1,9	2,3	2,3	2,8	4,4	4,9	6,4	6,4	7,0
n	2,3	2,8	3,3	4,4	5,4	6,4	7,5	7,5	8,5
h	8,5	11,0	15,0	18,0	23,0	31,0	35,0	35,0	44,0
m	4,6	6,5	8,0	10,0	12,0	14,0	17,0	17,0	21,0
d2	8,0	11,0	13,0	16,0	20,0	23,0	29,0	29,0	32,0
e	18,0	24,0	30,0	36,0	48,0	62,0	70,0	70,0	86,0

Wing Screws, American Type

DIN 316 A

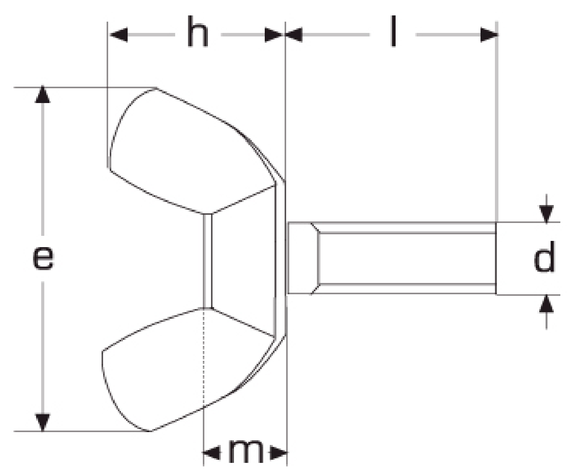

d	M 3	M 4	M 5	M 6	M 8	M 10	M 12
h	8,6	8,5	11,0	15,0	18,0	23,0	31,0
e	17,6	18,0	24,0	30,0	36,0	48,0	62,0
m	2,4	3,2	4,0	5,0	6,5	8,0	10,0
l	Range from 10 to 60						

Wing Screws

DIN 316

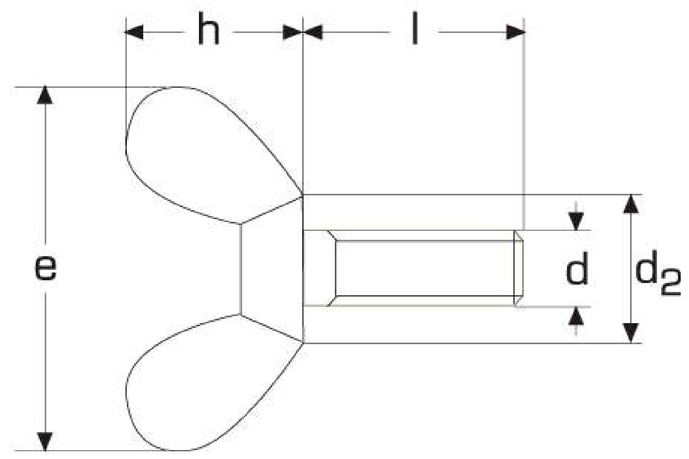

d	M 4	M 5	M 6	M 8	M 10	M 12
h	10,5	13,0	17,0	20,0	25,0	33,5
d2	8,0	11,0	13,0	16,0	20,0	23,0
e	20,0	26,0	33,0	39,0	51,0	65,0
l	Range from 10 to 50					

Slotted Capstan Screws

DIN 404

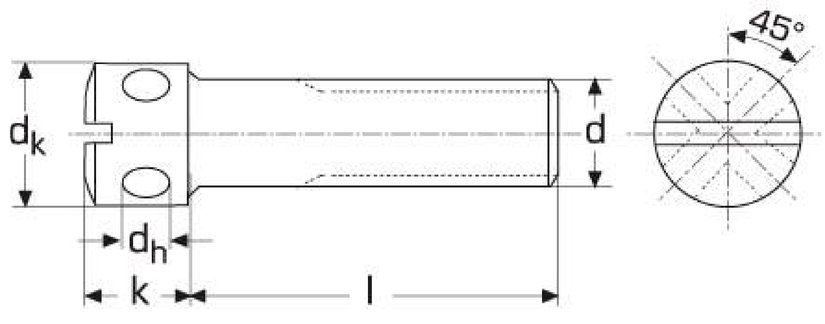

d	M 3	M 4	M 5	M 6
dk	5,5	7,0	8,5	10,0
k	4,0	5,0	6,5	8,0
dh	1,5	2,0	2,5	3,0
l	Range from 4 to 30			

Slotted Set Screws with Long Dog Point

DIN 417 / ISO 7435

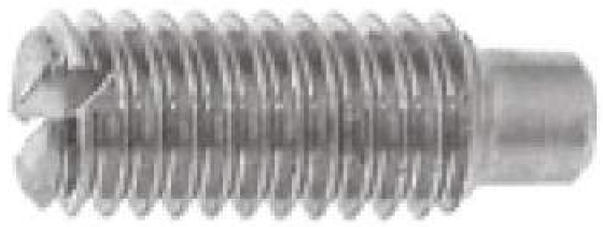

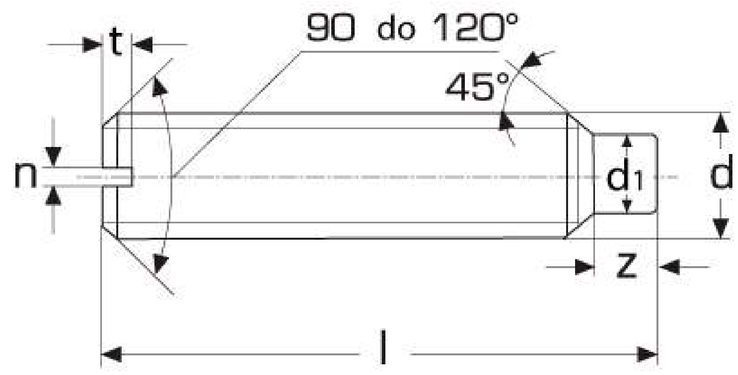

d	M 2,5	M 3	M 4	M 5	M 6	M 8	M 10	M 12
n	0,4	0,4	0,6	0,8	1,0	1,2	1,6	2,0
t	0,72	0,8	1,12	1,28	1,6	2,0	2,4	2,8
d1	1,5	2,0	2,5	3,5	4,0	5,5	7,0	8,5
z	1,25	1,5	2,0	2,5	3,0	4,0		
l	Range from 3 to 40							

Slotted Headless Screws with Champfered End

DIN 427 / ISO 2342

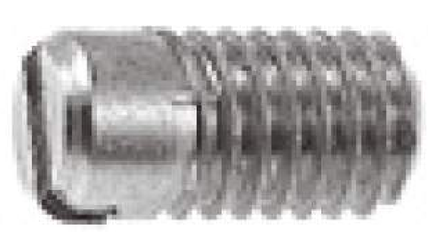

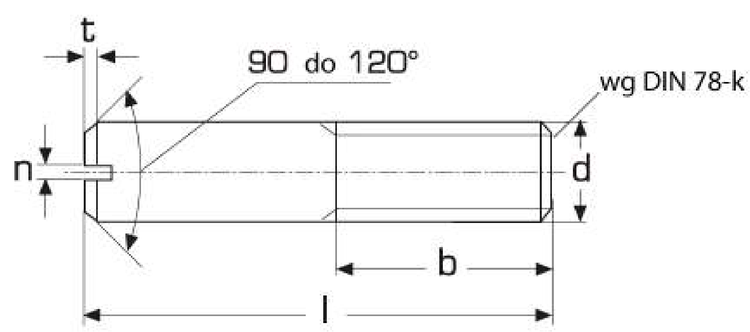

d	M 3	M 4	M 5	M 6	M 8	M 10
b	3,6	4,8	6,0	7,2	9,6	12,0
n	0,4	0,6	0,8	1,0	1,2	1,6
t min	1,25	1,75	2,0	2,5	3,1	3,75
t max	1,5	2,05	2,35	2,9	3,6	4,25
l	Range from 6 to 40					

Pipe Nuts

DIN 431

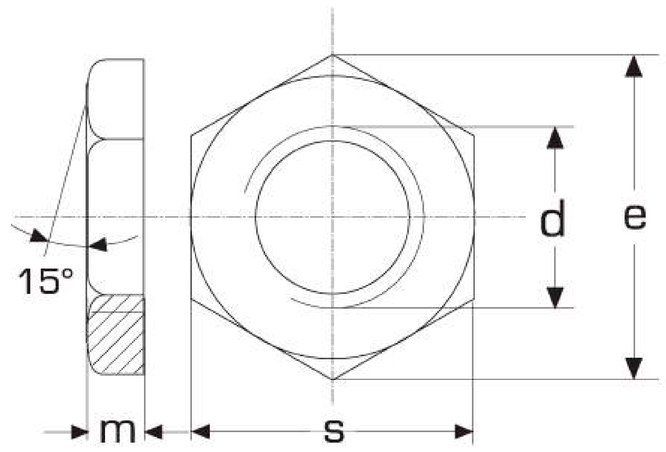

d	G 1/8"	G 1/4"	G 3/8"	G 1/2"	G 5/8"	G 3/4"	G 7/8"	G 1"	G 1 1/4"	G 1 1/2"	G 2"
m	6	6	7	8	8	9	9	10	11	12	13
e	20,88	23,91	29,56	35,03	35,03	39,55	45,20	50,85	60,79	66,44	82,60
s	19	22	27	32	32	36	41	46	55	60	75

Washers with External Tab

DIN 432

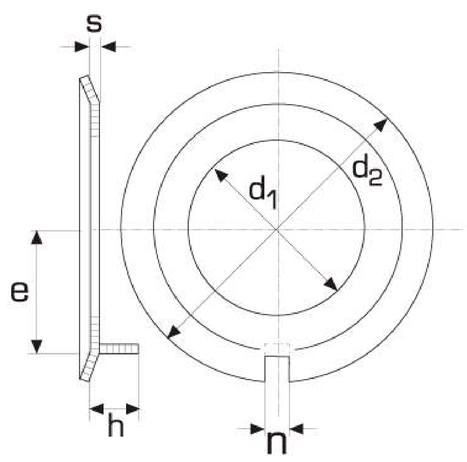

for thread	M4	M5	M6	M8	M10	M12	M14	M16	M18	M20	M22	M24	M27	M30	M33	M36	M39
d1	4,3	5,3	6,4	8,4	10,5	13,0	15,0	17,0	19,0	21,0	23,0	25,0	28,0	31,0	34,0	37,0	40,0
d2	14	17	19	22	26	30	33	36	40	42	50	50	58	63	68	75	82
n	2,5	3,5	3,5	3,5	4,5	4,5	4,5	5,5	6,5	6,5	7,5	7,5	8,5	8,5	9,5	11,0	11,0
e	5,5	7,0	7,5	8,5	10,0	12,0	13,0	15,0	18,0	18,0	20,0	21,0	23,0	25,0	28,0	31,0	33,0
h	2,0	2,5	3,0	4,0	4,0	4,5	4,5	4,5	4,5	4,5	6,5	6,5	9,5	9,5	9,5	9,5	11,0
s	0,40	0,75	0,75	1,00	1,00	1,20	1,20	1,20	1,20	1,60	1,60	1,60	1,60	1,60	1,60	2,00	2,00

Washers for Cheese Head Screws

DIN 433 / ISO 7092

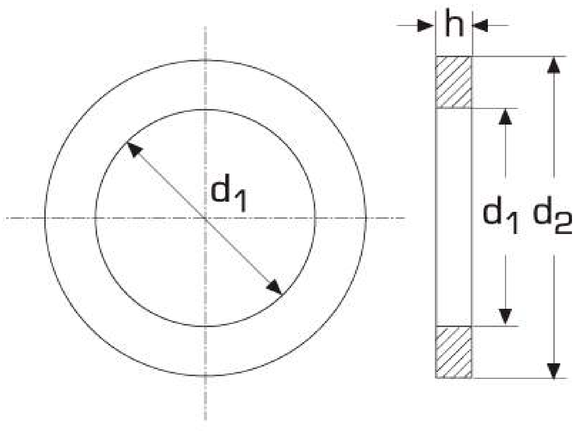

for thread	M1,6	M2	M2,5	M3	M3,5	M4	M5	M6	M8	M10	M12	M14	M16	M18	M20
d1	1,7	2,2	2,7	3,2	3,7	4,3	5,3	6,4	8,4	10,5	13,0	15,0	17,0	19,0	21,0
d2	3,5	4,5	5,0	6,0	7,0	8,0	9,0	11,0	15,0	18,0	20,0	24,0	28,0	30,0	34,0
h	0,3	0,3	0,5	0,5	0,5	0,5	1,0	1,6	1,6	1,6	2,0	2,5	2,5	2,5	3,0

Square Taper Washers for U-sections

DIN 434

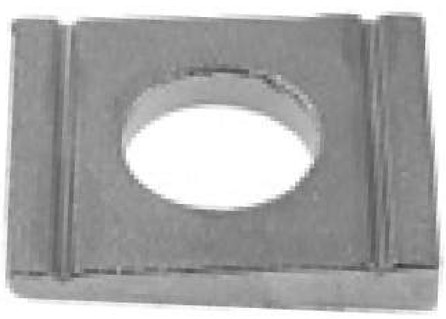

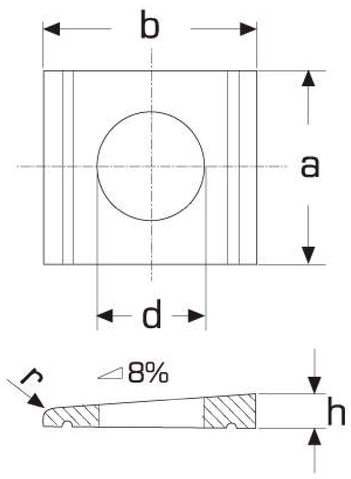

for thread	M8	M10	M12	M16	M20	M22	M24
d	9,0	11,0	13,5	17,5	22,0	24,0	26,0
a	22	22	26	32	40	44	56
b	22	22	30	36	44	50	56
h	3,8	3,8	4,9	5,9	7,0	8,0	8,5
r	1,6	1,6	2,0	2,4	2,8	3,2	3,2

Square Taper Washers for I-sections

DIN 435

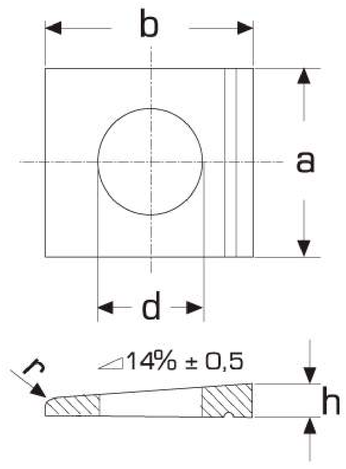

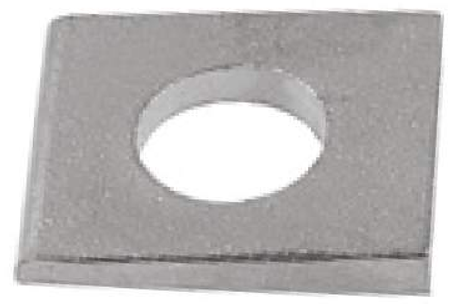

for thread	M 8	M 10	M 12	M 16	M 20	M 22	M 24
d	9,0	11,0	13,5	17,5	22,0	24,0	26,0
a	22	22	26	32	40	44	56
b	22	22	30	36	44	50	56
h	4,6	4,6	6,2	7,5	9,2	10,0	10,8
r	1,2	1,2	1,6	2,0	2,4	2,4	2,4

Square Washers for Wood Constructions

DIN 436

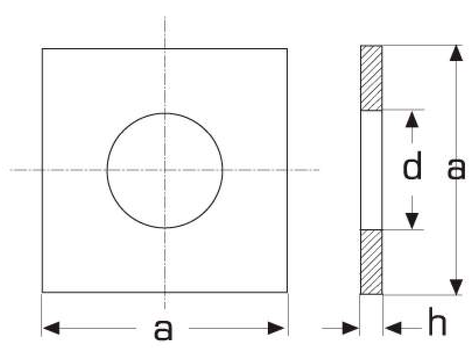

for thread	M 10	M 12	M 16	M 20	M 22	M 24
d	11,0	13,5	17,5	22,0	24,0	26,0
a	30	40	50	60	70	80
h	3	4	5	5	6	6

Slotted Set Screws with Cup Point

DIN 438 / ISO 7436

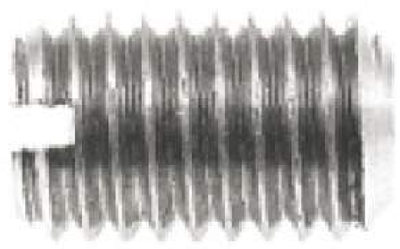

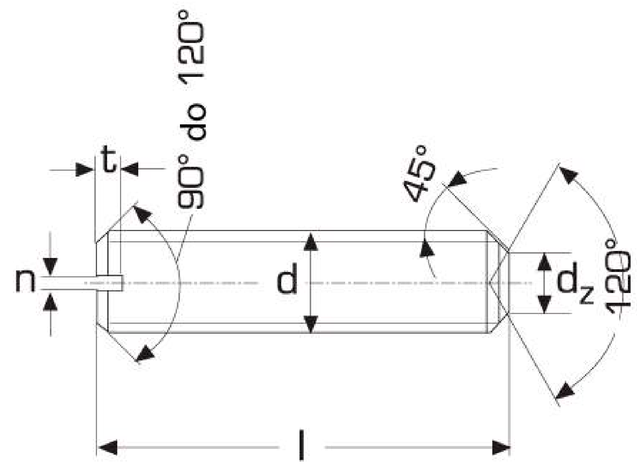

d	dz	n	t	l
M 2,5	1,2	0,4	0,72	Range from 3 to 40
M 3	1,4	0,4	0,8	
M 4	2,0	0,6	1,12	
M 5	2,5	0,8	1,28	
M 6	3,0	1,0	1,6	
M 8	5,0	1,2	2,0	
M 10	6,0	1,6	2,4	
M 12	8,0	2,0	2,8	

Hexagon Thin Nuts

DIN 439 / ISO 4035

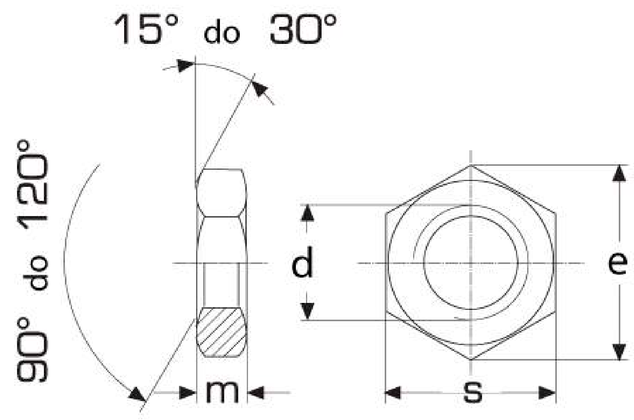

d	m	e	s
M 1,6	1,0	3,48	3,2
M 1,7	1,1	3,48	3,2
M 2	1,2	4,32	4,0
M 2,3	1,2	5,20	4,5
M 2,5	1,6	5,45	5,0
M 2,6	1,6	5,80	5,0
M 3	1,8	6,01	5,5
M 4	2,2	7,86	7,0
M 5	2,7	8,79	8,0
M 6	3,2	11,05	10,0
M 8	4,0	14,38	13,0
M 10	5,0	18,90	17,0
M 12	6,0	21,10	19,0
M 14	7,0	24,49	22,0
M 16	8,0	26,75	24,0
M 18	9,0	29,65	27,0
M 20	10,0	32,95	30,0
M 22	11,0	35,03	32,0
M 24	12,0	39,55	36,0
M 27	13,5	45,20	41,0
M 30	15,0	50,85	46,0
M 33	16,5	55,37	50,0
M 36	18,0	60,79	55,0
M 39	19,5	66,40	60,0
M 42	21,0	71,30	65,0
M 45	22,5	76,95	70,0
M 48	24,0	82,60	75,0

SRISHAA
MACHINED FASTENERS PVT.LTD.

Hexagon Thin Nuts, Fine Pitch

DIN 439 / ISO 8675

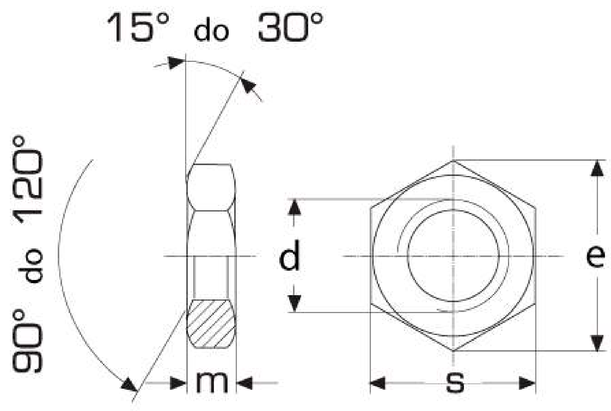

d	m	e	s
M 8 x 0,75	4,0	14,38	13
M 8 x 1	4,0	14,38	13
M 10 x 1	5,0	18,9	17
M 10 x 1,25	5,0	18,9	17
M 12 x 1	6,0	21,1	19
M 12 x 1,25	6,0	21,1	19
M 12 x 1,5	6,0	21,1	19
M 14 x 1,5	7,0	24,49	22
M 16 x 1,25	8,0	26,75	24
M 16 x 1,5	8,0	26,75	24
M 18 x 1,5	9,0	29,56	27
M 20 x 1,5	10,0	32,95	30
M 20 x 2	10,0	33,53	30
M 22 x 1,5	11,0	35,03	32
M 22 x 2	11,0	35,03	32
M 24 x 1,5	12,0	39,55	36
M 24 x 2	12,0	39,55	36
M 27 x 1,5	13,5	45,02	41
M 27 x 2	13,5	45,02	41
M 30 x 1,5	15,0	50,85	46
M 30 x 2	15,0	50,85	46
M 30 x 2	16,5	55,37	50

Washers, especially for Wood Construction

DIN 440 R / ISO 7094

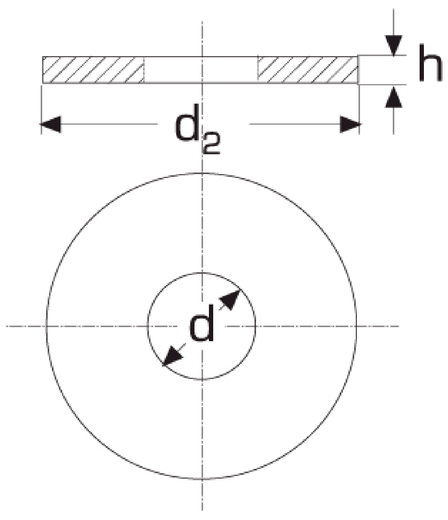

for thread	M 5	M 6	M 8	M 10	M 12	M 14	M 16	M 20	M 22	M 24
d	R 5,5	R 6,6	R 9	R 11	R 13,5	R 15,5	R 17,5	R 22	R 24	R 26
d2	18	22	28	34	44	50	56	72	80	85
h	2	2	3	3	4	4	5	6	6	6

Washers, especially for Wood Construction

DIN 440 v / ISO 7094

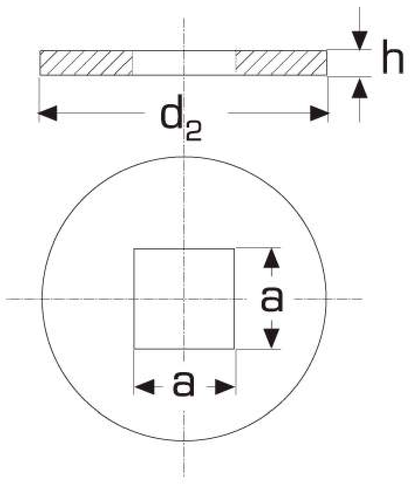

for thread	M 5	M 6	M 8	M 10	M 12	M 16	M 20	M 24
d	V 5,5	V 6,6	V 9	V 11	V 14	V 18	V 22	V 26
d2	18	22	28	34	44	56	72	85
h	2	2	3	3	4	5	6	6
a	5,5	6,6	9,0	11,0	14,0	18,0	22,0	26,0

Eye Bolts

DIN 444

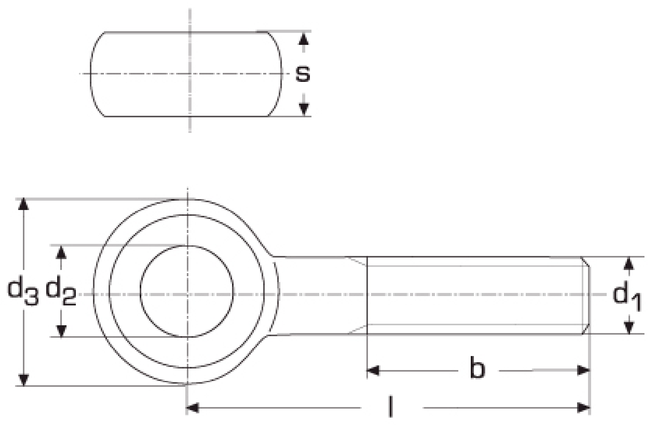

d1	M 6	M 8	M 10	M 12	M 16	M 20	M 24
d2	6	8	10	12	16	18	22
d3	14	18	20	25	32	40	45
s	6,85	8,85	11,82	13,82	16,82	21,79	24,79
b (l<125)	18	22	26	30	38	46	54
b (l>125)	-	-	32	36	44	52	60
l	Range from 30 to 150						

Tabwashers with Internal tab for Nuts Din 1804

DIN 462

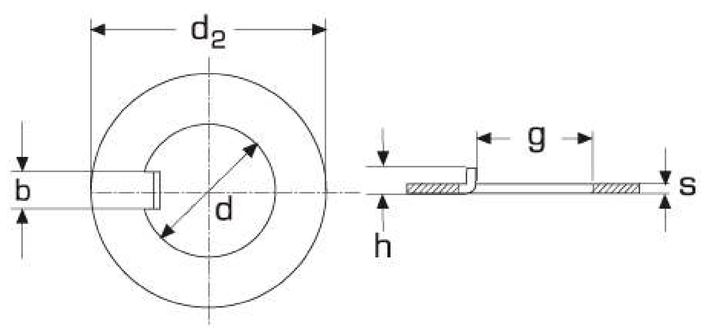

d	6	8	10	12	14	16	18	20	22	24	26	28	30	32	35	38	40
d2	16	20	25	28	30	32	34	36	40	42	45	50	50	52	55	58	62
b	3	3	4	5	5	5	6	6	6	6	7	7	7	7	7	8	8
h	2,5	2,5	3,0	3,0	3,0	3,0	4,0	4,0	4,0	5,0	5,0	5,0	5,0	5,0	5,0	5,0	5,0
g	3,9	5,9	7,4	9,3	11,4	13,5	15,4	17,5	19,5	21,6	23,5	25,5	27,5	29,6	32,6	35,3	37,3
s	0,8	0,8	0,8	0,8	0,8	1,0	1,0	1,0	1,0	1,0	1,0	1,0	1,2	1,2	1,2	1,2	1,2

Tabwashers with 2 Tabs

DIN 463

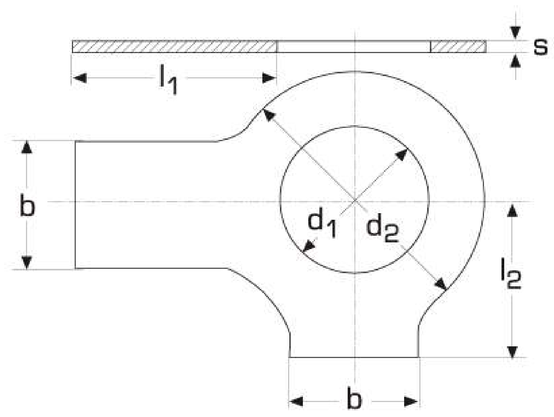

d1	4,3	5,3	6,4	8,4	10,5	13,0	15,0	17,0	19,0	21,0	23,0	25,0	28,0	31,0	34,0	37,0	40,0
d2	9,0	10,0	12,5	17,0	21,0	24,0	28,0	30,0	34,0	37,0	39,0	44,0	50,0	56,0	60,0	66,0	72,0
b	5	6	7	8	10	12	12	15	18	18	20	20	23	26	28	30	32
l1	14	16	18	20	22	28	28	32	36	36	42	42	48	52	56	60	64
l2	6,5	8,0	9,0	11,0	13,0	15,0	16,0	18,0	20,0	21,0	23,0	25,0	29,0	32,0	34,0	38,0	41,0
w	0,38	0,50	0,50	0,80	0,75	1,00	1,00	1,00	1,00	1,00	1,00	1,00	1,60	1,60	1,60	1,60	1,60

Knurled Thumb Screws, High Type

DIN 464

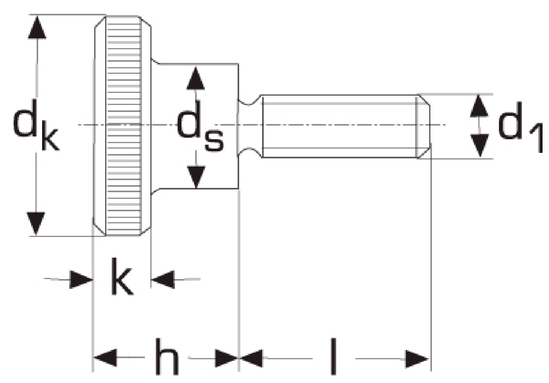

d1	M 3	M 4	M 5	M 6	M 8
dk	12	16	20	24	30
k	2,5	3,5	4,0	5,0	6,0
ds	6	8	10	12	16
h	7,5	9,5	11,5	15,0	18,0
l	Range from 4 to 25				

Knurled Thumb Screws, High Type, Slotted

DIN 465

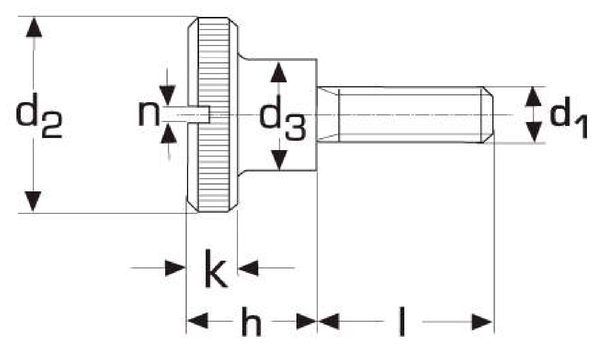

d1	M 3	M 4	M 5	M 6
d2	12	16	20	24
d3	6	8	10	12
h	7,5	9,5	11,5	15,0
k	2,5	3,5	4,0	5,0
n	0,8	1,0	1,2	1,6
l	Range from 4 to 20			

Knurled Thumb Nuts, High Type

DIN 466

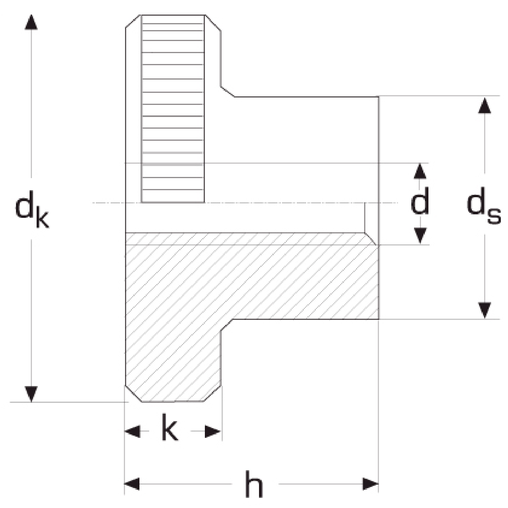

d	2,0	2,5	3,0	4,0	5,0	6,0	8,0	10,0
ds	4,5	5,0	6,0	8,0	10,0	12,0	16,0	20,0
dk	9	11	12	16	20	24	30	36
k	2,0	2,5	2,5	3,5	4,0	5,0	6,0	8,0
h	5,3	6,5	7,5	9,5	11,5	15,0	18,0	23,0

Knurled Thumb Nuts, Thin Type

DIN 467

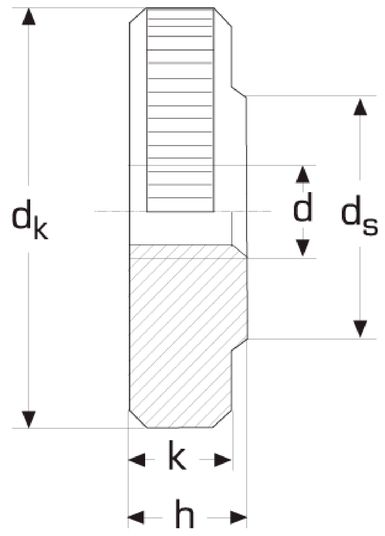

d	ds	dk	k	h
2,0	4,5	9	2,0	2,5
2,5	6,0	12	2,5	3,0
3,0	7,0	14	3,0	3,0
4,0	8,0	16	3,5	4,0
5,0	10,0	20	4,0	5,0
6,0	12,0	24	5,0	6,0
8,0	16,0	30	6,0	8,0
10,0	20,0	36	8,0	10,0

Retaining Rings for Shafts

DIN 471

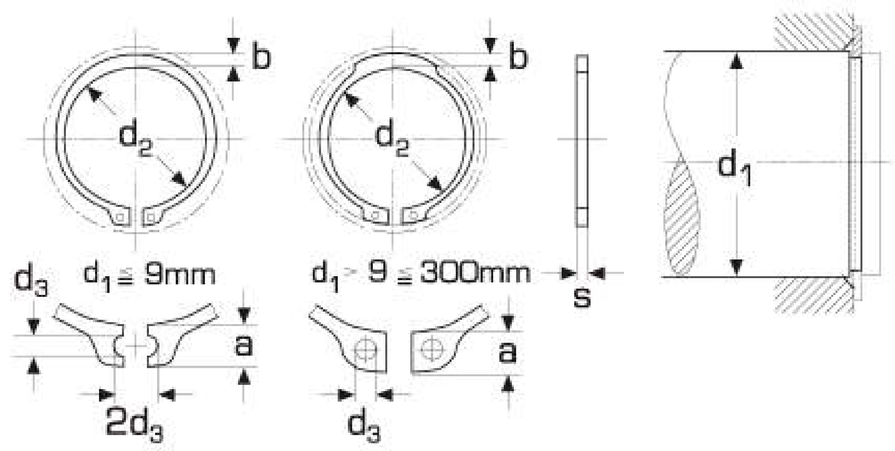

d1	d2	d3	a	b	s
3	2,7	1,0	1,9	0,8	0,40
4	3,7	1,0	2,2	0,9	0,40
5	4,7	1,0	2,5	1,1	0,60
6	5,6	1,2	2,7	1,3	0,70
7	6,5	1,2	3,1	1,4	0,80
8	7,4	1,2	3,2	1,5	0,80
9	8,4	1,2	3,3	1,7	1,00
10	9,3	1,5	3,3	1,8	1,00
11	10,2	1,5	3,3	1,8	1,00
12	11,0	1,7	3,3	1,8	1,00
13	11,9	1,7	3,4	2,0	1,00
14	12,9	1,7	3,5	2,1	1,00
15	13,8	1,7	3,6	2,2	1,00
16	14,7	1,7	3,7	2,2	1,00
17	15,7	1,7	3,8	2,3	1,00
18	16,5	2,0	3,9	2,4	1,20
19	17,5	2,0	3,9	2,5	1,20
20	18,5	2,0	4,0	2,6	1,20
21	19,5	2,0	4,1	2,7	1,20
22	20,5	2,0	4,2	2,8	1,20
23	21,4	2,0	4,3	2,9	1,20
24	22,2	2,0	4,4	3,0	1,20
25	23,2	2,0	4,4	3,0	1,20
26	24,2	2,0	4,5	3,1	1,20
27	25,1	2,0	4,6	3,1	1,20
28	25,9	2,0	4,7	3,2	1,50

SRISHAA
MACHINED FASTENERS PVT.LTD.

Retaining Rings for Shafts

DIN 471

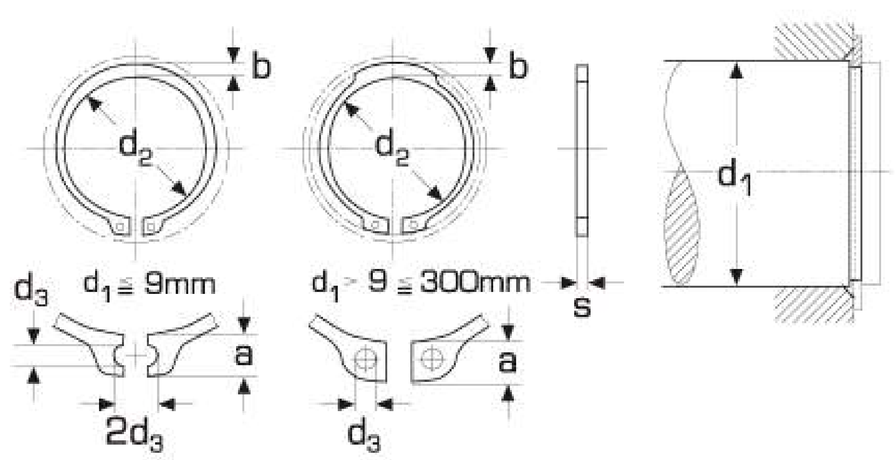

d1	d2	d3	a	b	s
29	26,9	2,0	4,8	3,4	1,50
30	27,9	2,0	5,0	3,5	1,50
32	29,6	2,5	5,2	3,6	1,50
34	31,5	2,5	5,4	3,8	1,50
35	32,2	2,5	5,6	3,9	1,50
36	33,2	2,5	5,6	4,0	1,75
38	35,2	2,5	5,8	4,2	1,75
39	36,0	2,5	5,9	4,3	1,75
40	36,5	2,5	6,0	4,4	1,75
42	38,5	2,5	6,5	4,5	1,75
45	41,5	2,5	6,7	4,7	1,75
48	44,5	2,5	6,9	5,0	1,75
50	45,8	2,5	6,9	5,1	2,00
55	50,8	2,5	7,2	5,4	2,00
60	55,8	2,5	7,4	5,8	2,00
65	60,8	3,0	7,8	6,3	2,50
70	65,5	3,0	8,1	6,6	2,50
75	70,5	3,0	8,4	7,0	2,50
80	74,5	3,0	8,6	7,4	2,50
85	79,5	3,5	8,7	7,8	3,00
90	84,5	3,5	8,8	8,2	3,00
95	89,5	3,5	9,4	8,6	3,00
100	94,5	3,5	9,6	9,0	3,00
105	98,0	3,5	9,9	9,3	4,00
110	103,0	3,5	10,1	9,6	4,00
120	113,0	3,5	11,0	10,2	4,00
130	123,0	4,0	11,6	10,7	4,00
140	133,0	4,0	12,0	11,2	4,00

Retaining Rings for Bores

DIN 472

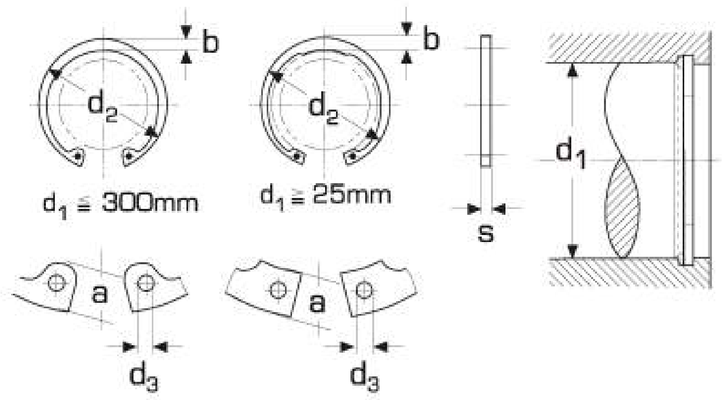

d1	d2	d3	a	b	s
8	8,7	1,0	2,4	1,1	0,80
9	9,8	1,0	2,5	1,3	0,80
10	10,8	1,2	3,2	1,4	1,00
11	11,8	1,2	3,3	1,5	1,00
12	13,0	1,5	3,4	1,7	1,00
13	14,1	1,5	3,6	1,8	1,00
14	15,1	1,7	3,7	1,9	1,00
15	16,2	1,7	3,7	2,0	1,00
16	17,3	1,7	3,8	2,0	1,00
17	18,3	1,7	3,9	2,1	1,00
18	19,5	2,0	4,1	2,2	1,00
19	20,5	2,0	4,1	2,2	1,00
20	21,5	2,0	4,2	2,3	1,00
21	22,5	2,0	4,2	2,4	1,00
22	23,5	2,0	4,2	2,5	1,00
23	24,6	2,0	4,3	2,5	1,20
24	25,9	2,0	4,4	2,6	1,20
25	26,9	2,0	4,5	2,7	1,20
26	27,9	2,0	4,7	2,8	1,20
27	28,9	2,0	4,7	2,8	1,20
28	30,1	2,0	4,8	2,9	1,20
29	31,1	2,0	4,8	3,0	1,20
30	32,1	2,0	4,8	3,0	1,20
31	33,4	2,5	5,2	3,2	1,20
32	34,4	2,5	5,4	3,2	1,20
33	35,5	2,5	5,4	3,3	1,20
34	36,5	2,5	5,4	3,3	1,50
35	37,8	2,5	5,4	3,4	1,50

SRISHAA
MACHINED FASTENERS PVT.LTD.

Retaining Rings for Bores

DIN 472

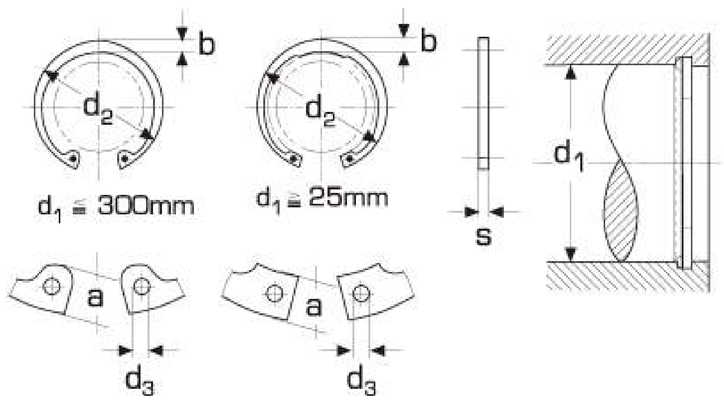

d1	d2	d3	a	b	s
36	38,8	2,5	5,4	3,5	1,50
37	39,8	2,5	5,5	3,6	1,50
38	40,8	2,5	5,5	3,7	1,50
39	42,0	2,5	5,6	3,8	1,50
40	43,5	2,5	5,8	3,9	1,75
41	44,5	2,5	5,9	4,0	1,75
42	45,5	2,5	5,9	4,1	1,75
43	46,5	2,5	5,9	4,2	1,75
44	47,5	2,5	6,0	4,2	1,75
45	48,5	2,5	6,2	4,3	1,75
47	50,5	2,5	6,4	4,4	1,75
48	51,5	2,5	6,4	4,5	1,75
50	54,2	2,5	6,5	4,6	2,00
52	56,2	2,5	6,7	4,7	2,00
55	59,2	2,5	6,8	5,0	2,00
58	62,2	2,5	6,9	5,2	2,00
60	64,2	2,5	7,3	5,4	2,00
62	66,2	2,5	7,3	5,5	2,00
65	69,2	3,0	7,6	5,8	2,50
68	72,5	3,0	7,8	6,1	2,50
70	74,5	3,0	7,8	6,2	2,50
72	76,5	3,0	7,8	6,4	2,50
75	79,5	3,0	7,8	6,6	2,50
80	85,5	3,0	8,5	7,0	2,50
85	90,5	3,5	8,6	7,2	3,00
90	95,5	3,5	8,6	7,6	3,00
95	100,5	3,5	8,6	8,1	3,00
100	105,5	3,5	9,2	8,4	3,00
105	112,0	3,5	9,5	8,7	4,00
110	117,0	3,5	10,4	9,0	4,00
120	127,0	3,5	11,0	9,4	4,00
130	137,0	4,0	11,0	10,2	4,00
140	147,0	4,0	11,2	10,7	4,00

Slotted Round Nuts

DIN 546

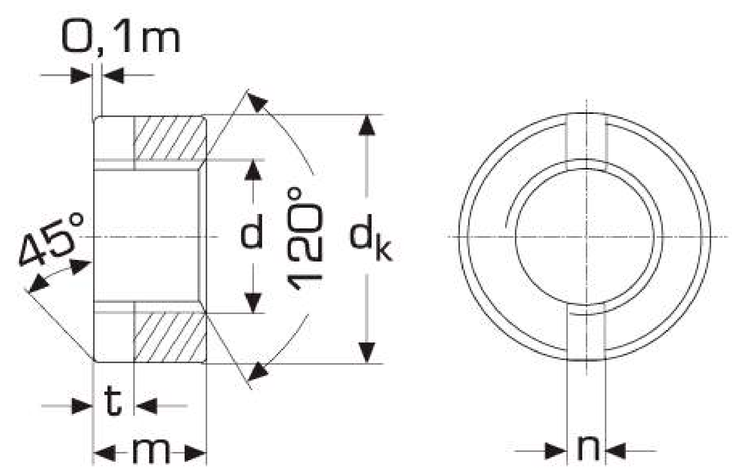

d1	dk	m	n	t
M 1,6	3,5	1,6	0,5	0,6
M 2	4,5	2,0	1,0	0,8
M 2,5	5,5	2,2	1,2	0,9
M 3	6,0	2,5	1,2	1,0
M 3,5	7,0	3,0	1,4	1,0
M 4	8,0	3,5	1,4	1,2
M 5	9,0	4,2	2,0	1,5
M 6	11,0	5,0	2,5	2,0
M 8	14,0	6,5	3,0	2,5
M 10	18,0	8,0	3,5	3,2
M 12	21,0	10,0	4,0	3,8
M 16	26,0	12,0	4,0	3,8

Two-Hole Nuts

DIN 547

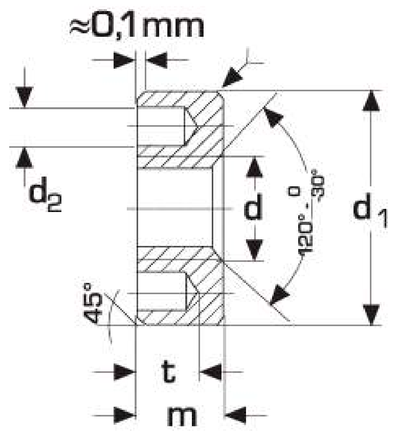

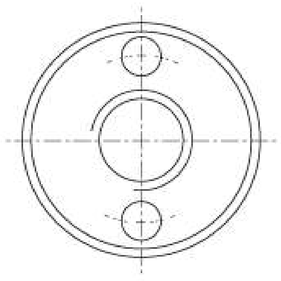

d	M 5	M 6	M 8	M 10
d1	12	14	18	22
d2	2,0	2,5	3,0	3,5
m	4,2	5,0	6,5	8,0
t	2,3	2,8	3,3	3,8

Slotted Set Screws with Flat Point

DIN 551 / ISO 4766

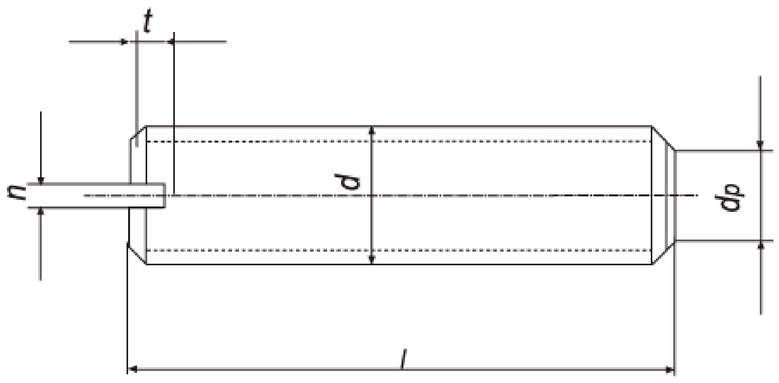

d	M 1,6	M 2	M 2,5	M 3	M 4	M 5	M 6	M 8	M 10	M 12
dp	0,8	1,0	1,5	2,0	2,5	3,5	4,0	5,5	7,0	8,5
t	0,56	0,64	0,72	0,80	1,12	1,28	1,60	2,00	2,40	2,80
n	0,25	0,25	0,40	0,40	0,60	0,80	1,00	1,20	1,60	2,00
l	Range from 2 to 80									

SRISHAA
MACHINED FASTENERS PVT.LTD.

Slotted Set Screws with Cone Point

DIN 553 / ISO 7434

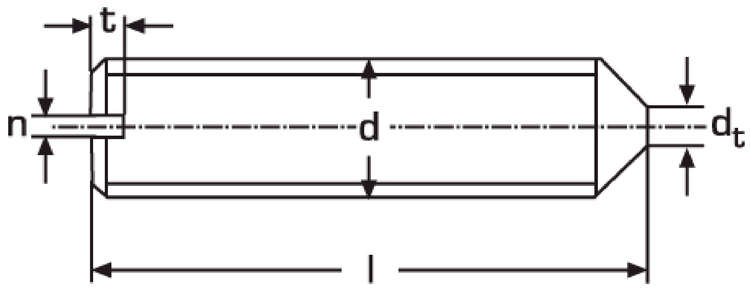

d	M 1,6	M 2	M 2,5	M 3	M 4	M 5	M 6	M 8	M 10	M 12
dt	0,16	0,20	0,25	0,30	0,40	0,50	1,50	2,00	2,50	3,00
t	0,56	0,64	0,72	0,80	1,12	1,28	1,60	2,00	2,40	2,80
n	0,25	0,25	0,40	0,40	0,60	0,80	1,00	1,20	1,60	2,00
l	Range from 2 to 60									

Square Nuts

DIN 557

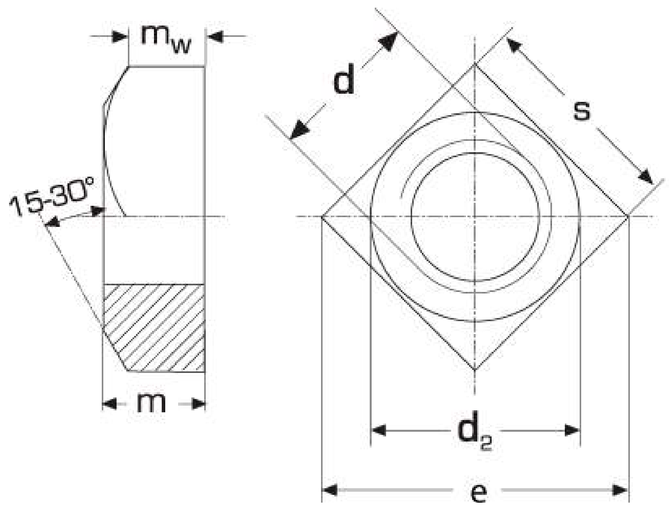

d	M 5	M 6	M 8	M 10	M 12	M 16
d2	6,7	8,7	11,5	14,5	16,5	22,0
e	11,3	14,1	18,4	24,0	26,9	33,9
s	8	10	13	17	19	24
m	4,0	5,0	6,5	8,0	10,0	13,0
mw	2,5	3,2	4,1	5,2	6,6	8,6

Square Thin Nuts

DIN 562

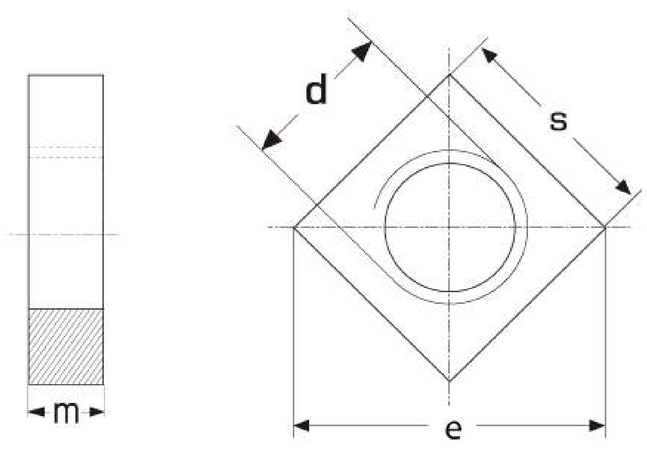

d	M 2	M 2,5	M 3	M 4	M 5	M 6	M 8	M 10
e	5,0	6,3	7,0	8,9	10,2	12,7	16,5	21,5
s	4,0	5,0	5,5	7,0	8,0	10,0	13,0	17,0
m	1,2	1,6	1,8	2,2	2,7	3,2	4,0	5,0

Hexagon Head Wood Screws

DIN 571

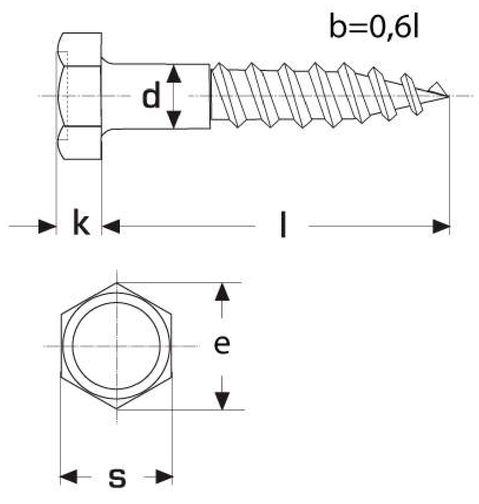

d	4	5	6	7	8	10	12	16
k	2,8	3,5	4,0	5,0	5,5	7,0	8,0	10,0
e	7,50	8,63	10,89	13,07	14,20	18,72	20,88	26,17
s	7	8	10	12	13	17	19	24
l	Range from 20 to 300							

Lifting Eye Bolts

DIN 580 / ISO 3266

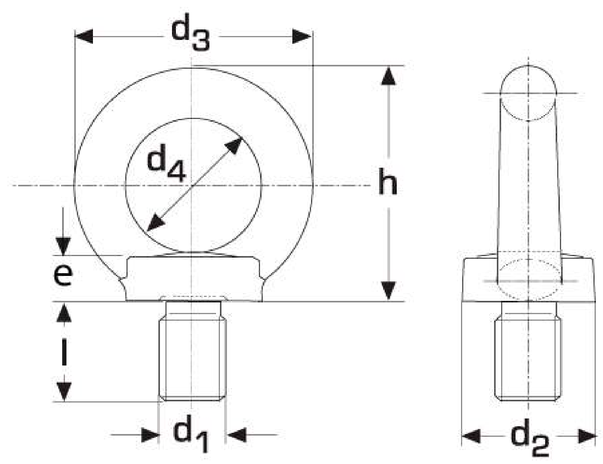

d1	M 6	M 8	M 10	M 12	M 16	M 20	M 24	M 27	M 30	M 36
l	11,0	13,0	17,0	20,5	27,0	30,0	36,0	45,0	45,0	54,0
d2	16	20	25	30	35	40	50	65	65	75
d3	27	36	45	54	63	72	90	108	108	126
d4	16	20	25	30	35	40	50	60	60	70
h	31	36	45	53	62	71	90	109	109	128
e	6	6	8	10	12	14	18	22	22	26

Lifting Eye Nuts

DIN 582

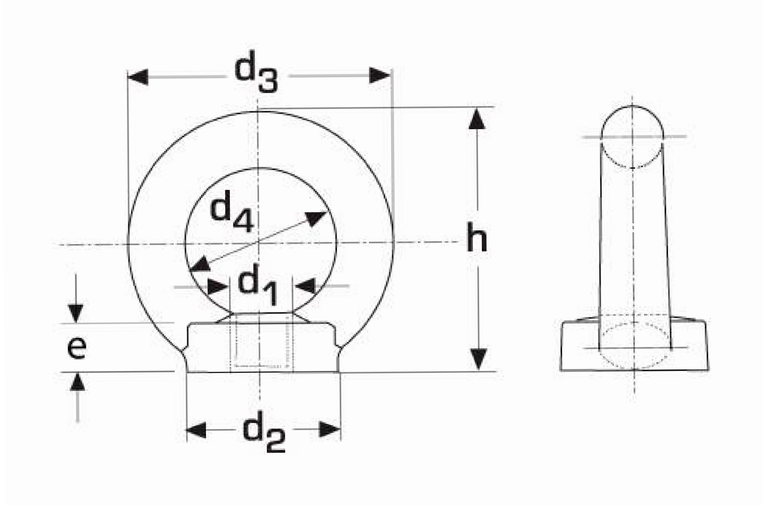

d1	M 6	M 8	M 10	M 12	M 16	M 20	M 24	M 27	M 30	M 36
d2	16	20	25	30	35	40	50	65	65	75
d3	27	36	45	54	63	72	90	108	108	126
d4	16	20	25	30	35	40	50	60	60	70
h	31	36	45	53	62	71	90	109	109	128
e	8,0	8,5	10,0	11,0	13,0	16,0	20,0	22,0	25,0	30,0

SRISHAA
MACHINED FASTENERS PVT.LTD.

Mushroom Head Square Neck Bolts

DIN 603 / ISO 8677

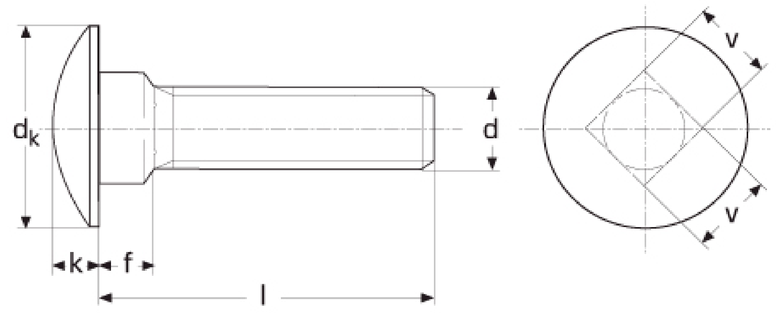

d	M 5	M 6	M 8	M 10	M 12	M 16
dk	13,55	16,55	20,65	24,65	30,65	38,80
k	3,30	3,88	4,88	5,38	6,95	8,95
v	5,48	6,48	8,58	10,58	12,70	16,70
f	4,10	4,60	5,60	6,60	8,75	12,90
l	Range from 12 to 200					

Flat Knurled Thumb Screws

DIN 653

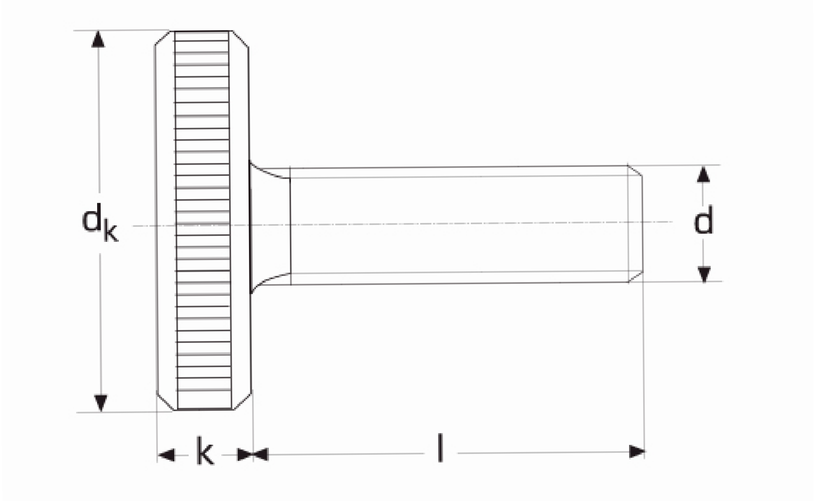

d	M 2	M 2,5	M 3	M 3,5	M 4	M 5	M 6	M 8	M 10
dk	9	11	12	14	16	20	24	30	36
k	2,0	2,5	2,5	3,0	3,5	4,0	5,0	6,0	7,0
l	Range from 4 to 40								

Round Head Rivets

DIN 660

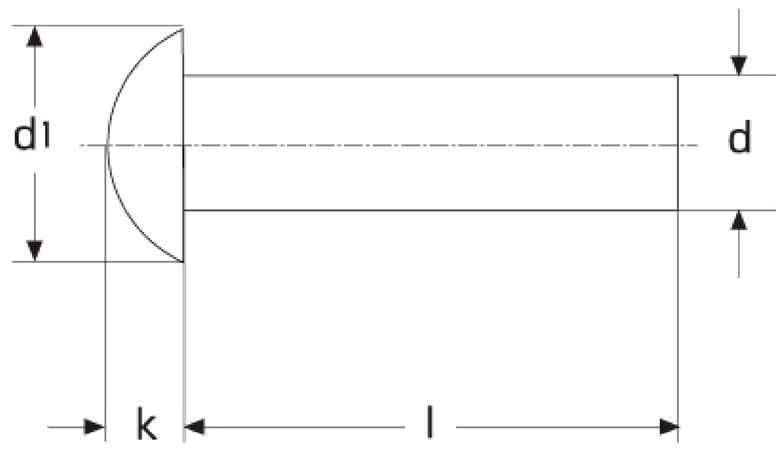

d	2	3	4	5	6
dk	1,2	1,8	2,4	3	3,6
k	3,5	5,2	7	8,8	10,5
l(mm)	Range from 6 to 50				

Countersunk Head Rivets

DIN 661

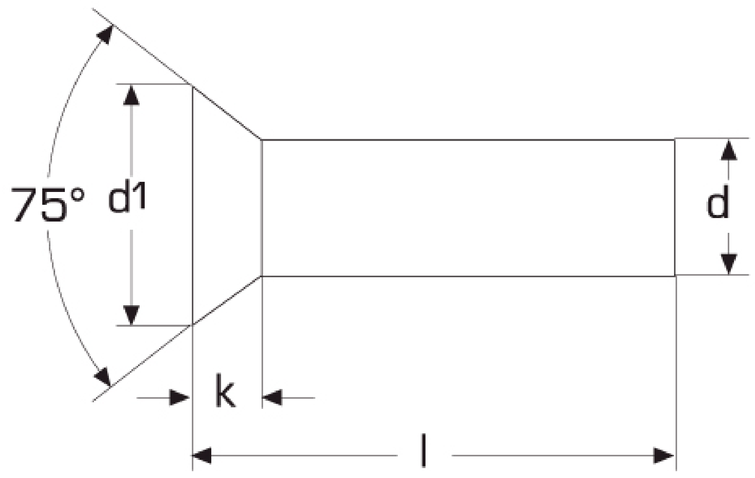

d	2	3	4	5	6
dk	1	1,4	2	2,5	3
k	3,5	5,2	7	8,8	10,5
l(mm)	Range from 6 to 50				

Adjusting Rings

DIN 705

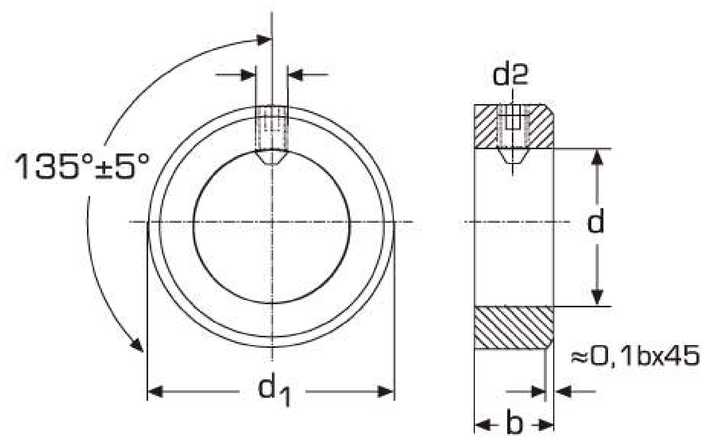

d	b	d1	d2	set screw
5	6	10	M 3	M 3 x 4
6	8	12	M 4	M 4 x 5
8	8	16	M 4	M 4 x 6
9	10	18	M 5	M 5 x 8
10	10	20	M 5	M 5 x 8
11	10	20	M 5	M 5 x 8
12	12	22	M 6	M 6 x 8
13	12	22	M 6	M 6 x 8
14	12	25	M 6	M 6 x 8
15	12	25	M 6	M 6 x 8
16	12	28	M 6	M 6 x 8
18	14	32	M 6	M 6 x 8
20	14	32	M 6	M 6 x 8
22	14	36	M 6	M 6 x 10
24	16	40	M 8	M 8 x 12
25	16	40	M 8	M 8 x 10
26	16	40	M 8	M 8 x 10
28	16	45	M 8	M 8 x 12
30	16	45	M 8	M 8 x 10
32	16	50	M 8	M 8 x 12
34	16	50	M 8	M 8 x 12
35	16	56	M 8	M 8 x 12
36	16	56	M 8	M 8 x 12
38	16	56	M 8	M 8 x 12
40	18	63	M 10	M 10 x 16
45	18	70	M 10	M 10 x 16
50	18	80	M 10	M 10 x 16

Studs, Metal end ~2d

DIN 835

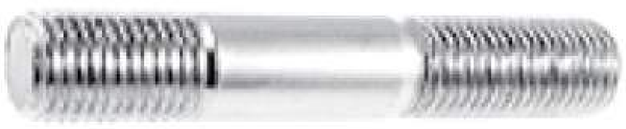

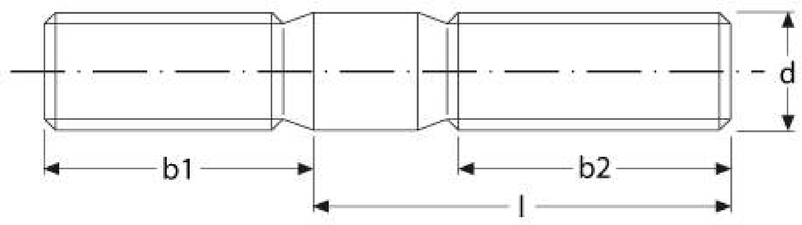

d	b1	b2	l
M 5	10	16	Range from 16 to 120
M 6	12	18	
M 8	16	22	
M 10	20	26	
M 12	24	30	
M 16	32	38	
M 20	40	46	
M 24	48	54	

Hexagon Socket Pipe Plugs, Conical Thread

DIN 906

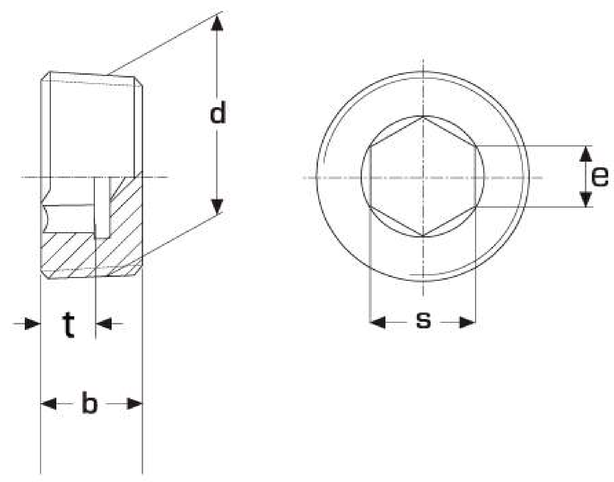

d	b	e	s	t
M 8 x 1	8	4,6	4	4,0
M 10 x 1	8	5,7	5	4,0
M 12 x 1,5	10	6,9	6	5,0
M 14 x 1,5	10	8,0	7	5,0
M 16 x 1,5	10	9,2	8	5,0
M 18 x 1,5	10	9,2	8	5,0
M 20 x 1,5	10	11,4	10	5,0
M 22 x 1,5	10	11,4	10	5,0
M 24 x 1,5	12	13,7	12	6,0
M 26 x 1,5	12	13,7	12	6,0
M 27 x 2	12	13,7	12	6,0
M 30 x 1,5	12	19,4	17	6,0
M 30 x 2	12	19,4	17	6,0
M 36 x 1,5	15	21,7	19	7,5

R 1/8"	8	5,7	5	4,0
R 1/4"	10	8,0	7	5,0
R 3/8"	10	9,2	8	5,0
R 1/2"	10	11,4	10	5,0
R 3/4"	12	13,7	12	6,0
R 1"	12	19,4	17	6,0
R 1 1/4"	18	25,2	22	11,5
R 1 1/2"	20	27,4	24	11,5
R 2"	22	35,6	32	

SRISHAA
MACHINED FASTENERS PVT.LTD.

Hexagon Socket Pipe Plugs, Cylindrical Thread

DIN 908

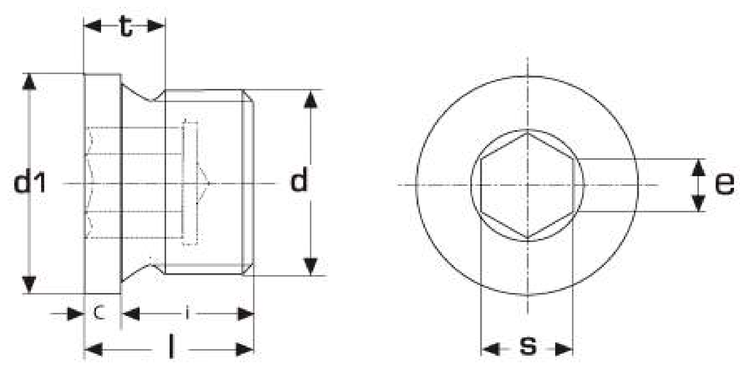

d	d1	s	e	c	i	l	t min
M 10 x 1	14	5	5,7	3	8	11	5
M 12 x 1,5	17	6	6,9	3	12	15	7
M 14 x 1,5	19	6	6,9	3	12	15	7
M 16 x 1,5	21	8	9,2	3	12	15	7,5
M 18 x 1,5	23	8	9,2	4	12	16	7,5
M 20 x 1,5	25	10	11,4	4	14	18	7,5
M 22 x 1,5	27	10	11,4	4	14	18	7,5
M 24 x 1,5	29	12	13,7	4	14	18	7,5
M 26 x 1,5	31	12	13,7	4	16	20	9
M 27 x 2	32	12	13,7	4	16	20	9
M 30 x 1,5	36	17	19,4	4	16	20	9
M 30 x 2	36	17	19,4	4	16	20	9
M 33 x 2	39	17	19,4	5	16	21	9
M 36 x 1,5	42	19	21,7	5	16	21	10,5
G 1/8 A	14	5	5,7	3	8	11	5
G 1/4 A	18	6	6.9	3	12	15	7
G 3/8 A	22	8	9,2	3	12	15	7,5
G 1/2 A	26	10	11,4	4	14	18	7,5
G 3/4 A	32	12	13,7	4	16	20	9
G 1 A	39	17	19,4	5	16	21	9
G 1 1/4 A	49	22	25,2	5	16	21	10,5
G 1 1/2 A	55	24	27,4	5	16	21	10,5
G 2 A	68	32	36,6	5	20	25	14

Hexagon Socket Screw Plugs
Heavy Type(Cylindrical thread, Metric)

DIN 910

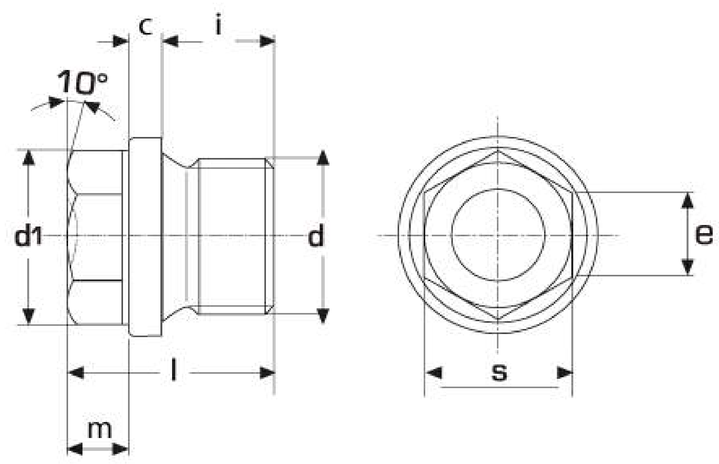

d	d1	s	e	m	c	i	l
M 10 x 1	14	10	10,89	6	3	8	17
M 12 x 1,5	17	13	14,2	6	3	12	21
M 14 x 1,5	19	13	14,2	6	3	12	21
M 16 x 1,5	21	17	18,72	6	3	12	21
M 18 x 1,5	23	17	18,72	8	4	12	24
M 20 x 1,5	25	19	20,88	8	4	14	26
M 22 x 1,5	27	19	20,88	8	4	14	26
M 24 x 1,5	29	22	23,91	9	4	14	27
M 26 x 1,5	31	24	26,17	10	4	16	30
M 27 x 2	32	24	26,17	10	4	16	30
M 30 x 1,5	36	24	26,17	10	4	16	30

G 1/8 A	14	10	10,89	6	3	8	17
G 1/4 A	18	13	14,2	6	3	12	21
G 3/8 A	22	17	18,72	6	3	12	21
G 1/2 A	26	19	20,88	8	4	14	26
G 5/8 A	28	24	21,9	8	4	14	26
G 3/4 A	32	24	26,17	10	4	16	30
G 1 A	39	27	29,56	11	5	16	32
G 1 1/4 A	49	30	32,95	12	5	16	33
G 1 1/2 A	55	30	32,95	12	5	16	33
G 2 A	68	36	39,55	15	5	20	40

SRISHAA
MACHINED FASTENERS PVT.LTD.

Hexagon Socket Head Cap Screws

DIN 912 / ISO 4762

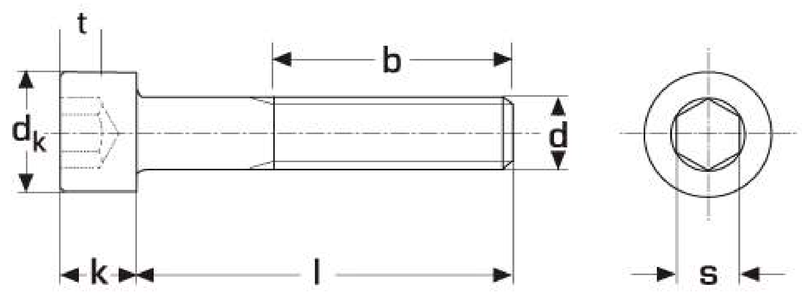

d	M 1,6	M 2	M 2,5	M 3	M 4	M 5	M 6	M 8	M 10	M 12
b	15	16	17	18	20	22	24	28	32	36
t min	0,7	1	1,1	1,3	2	2,5	3	4	5	6
s	1,5	1,5	2	2,5	3	4	5	6	8	10
k max	1,6	2	2,5	3	4	5	6	8	10	12
dk	3	3,8	4,5	5,5	7	8,5	10	13	16	18
l	Range 3 to 300									

d	M 14	M 16	M 18	M 20	M 22	M 24	M 27	M 30
b	40	44	48	52	56	60	66	72
t min	7	8	9	10	11	12	13,5	15,5
s	12	14	14	17	17	19	19	22
k max	14	16	18	20	22	24	27	30
dk	21	24	27	30	33	36	40	45
l	Range from 20 to 320							

SRISHAA
MACHINED FASTENERS PVT.LTD.

Hexagon Socket Set Screws with Flat Point

DIN 913 / ISO 4026

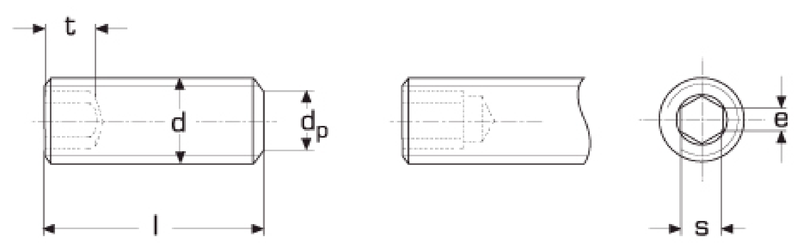

d	M 1,6	M 2	M 2,5	M 3	M 4	M 5
dp max	0,8	1	1,5	2	2,5	3,5
t min	0,7	0,8	1,2	1,2	1,5	2
e	0,803	1,003	1,427	1,73	2,3	2,87
s	0,7	0,9	1,3	1,5	2	2,5
l	Range from 2 to 40					

d	M 6	M 8	M 10	M 12	M 16	M 20
dp max	4	5,5	7	8,5	12	15
t min	2	3	4	4,8	6,4	8
e	3,44	4,58	5,72	6,86	9,15	11,43
s	3	4	5	6	8	10
l	Range from 5 to 100					

SRISHAA
MACHINED FASTENERS PVT.LTD.

Hexagon Socket Set Screws with Cone Point

DIN 914 / ISO 4027

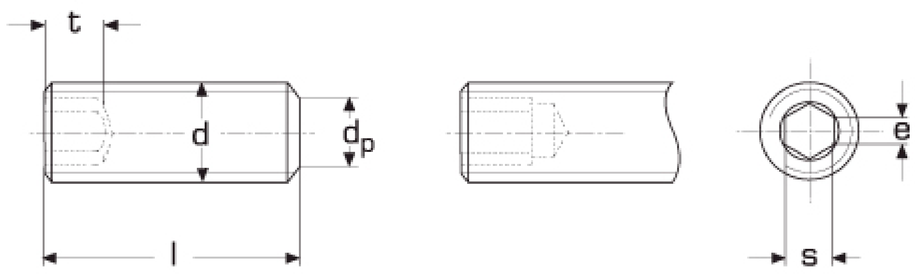

d	dt	t	e	s	l
M 2	-	1,7	1,003	0,9	Range from 3 to 100
M 2,5	-	2,0	1,427	1,3	
M 3	-	2,0	1,730	1,5	
M 4	-	2,5	2,300	2,0	
M 5	-	3,0	2,870	2,5	
M 6	0,90	3,5	3,440	3,0	
M 8	1,40	5,0	4,580	4,0	
M 10	1,90	6,0	5,720	5,0	
M 12	2,40	8,0	6,860	6,0	
M 16	3,25	10,0	9,150	8,0	
M 20	4,25	12,0	11,430	10,0	

Hexagon Socket Set Screws with Dog Point

DIN 915

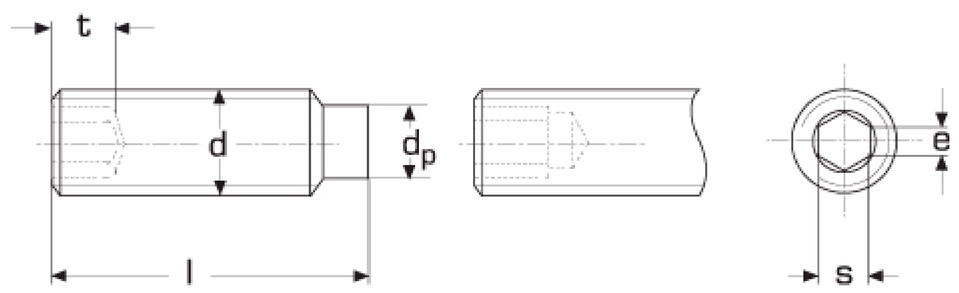

d	M 3	M 4	M 5	M 6	M 8	M 10	M 12
dp	1,75	2,25	3,2	3,7	5,2	6,64	8,14
t	1,2/2	1,5/2,5	2/3	2/3,5	3/5	4/6	4,8/8
s	1,5	2	2,5	3	4	5	6
l	Range from 3 to 60						

Hexagon Socket Set Screws with Cup Point

DIN 916 / ISO 4029

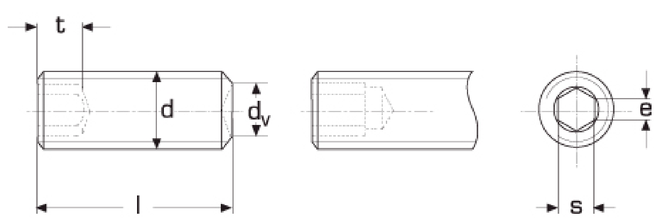

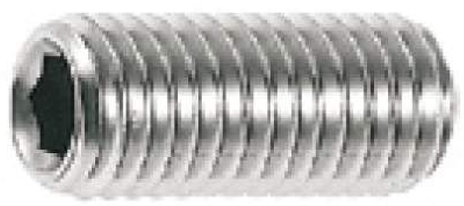

d	M 1,6	M 2	M 2,5	M 3	M 4	M 5	M 6	M 8	M 10	M 12	M 16	M 20
dv	0,8	1,0	1,2	1,4	2,0	2,5	3,0	5,0	6,0	8,0	10,0	14,0
t		1,7	2,0	2,0	2,5	3,0	3,5	5,0	6,0	8,0	10,0	12,0
e		1,0	1,4	1,7	2,3	2,9	3,4	4,6	5,7	6,9	9,2	11,4
s	0,7	0,9	1,3	1,5	2,0	2,5	3,0	4,0	5,0	6,0	8,0	10,0
l	Range from 2 to 100											

Hexagon Cap Nuts

DIN 917

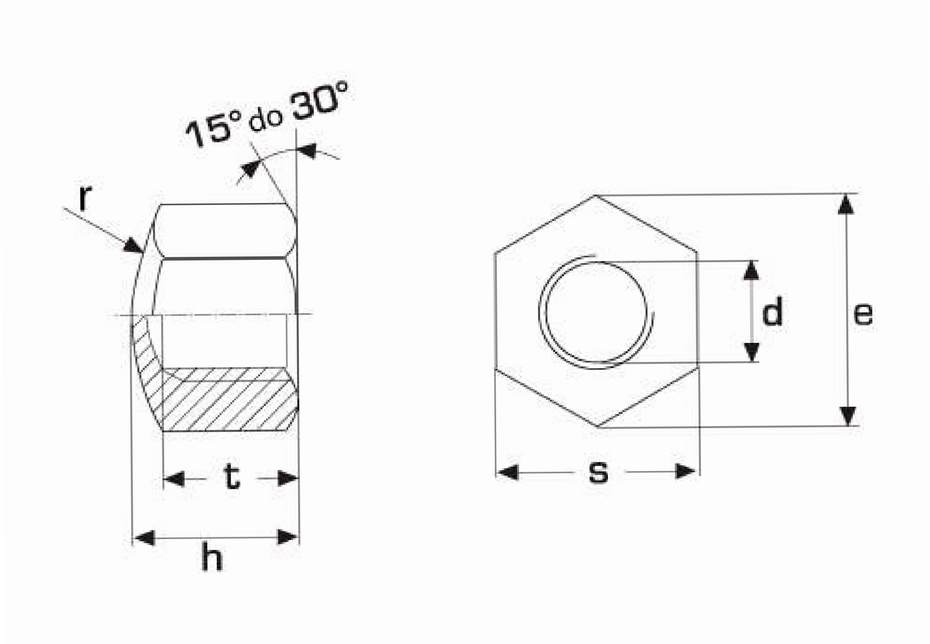

d	h	t	r	e	s
M 3	4,0		6	6,01	5,5
M 4	5,5	4,16 - 4,64	8	7,66	7,0
M 5	7,0	4,96 - 5,44	10	8,79	8,0
M 6	9,0	6,71 - 7,29	12	11,05	10,0
M 8	12,0	9,21 - 9,79	15	14,38	13,0
M 10	14,0	10,65 - 11,35	20	17,77	17,0
M 12	16,0	13,15 - 13,85	25	20,03	19,0
M 14	18,0	14,65 - 15,35	28	23,35	22,0
M 16	20,0	16,65 - 17,35	30	26,75	24,0
M 18	22,0	18,58 - 19,42	32	29,56	27,0
M 20	25,0	20,58 - 21,42	35	32,95	30,0
M 22	28,0	21,58 - 22,42	35	35,03	34,0
M 24	30,0	23,58 - 24,42	40	39,55	36,0
M 27	32,0	25,58 - 26,42	50	45,20	41,0
M 30	34,0	27,58 - 28,42	60	50,85	46,0

Slotted Pan Head Screws, Small Head

DIN 920

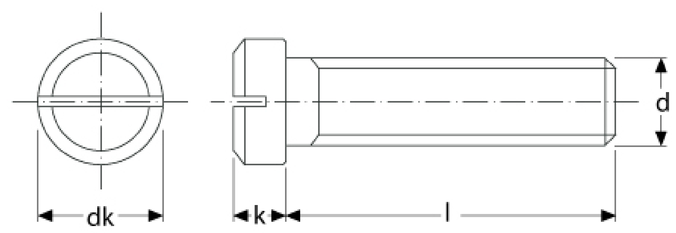

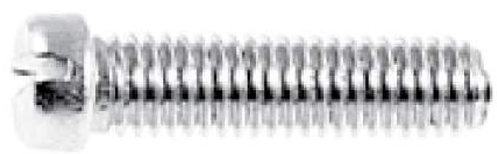

d	M 2	M 3	M 4	M 5	M 6	M 8
k	0,8	1,0	1,2	1,4	2,0	14,0
dk	0,7	0,9	1,3	1,5	2,0	10,0
l	Range from 4 to 25					

Slotted Pan Head Screws, Large Head

DIN 921

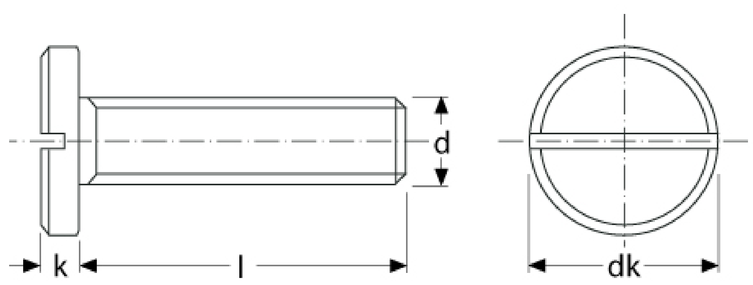

d	M 2	M 3	M 4	M 5	M 6	M 8
k	1,2	1,8	2,4	2,7	3,1	3,8
dk	6	8	12	16	20	25
l	Range from 2,5 to 25					

Slotted Pan Head Screws with Shoulder

DIN 923

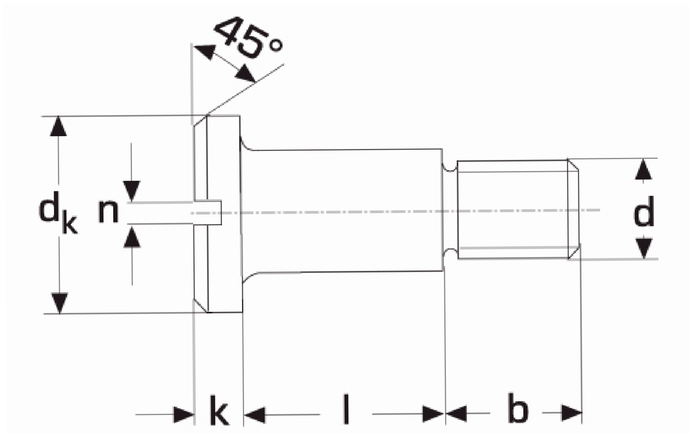

d	M 2	M 3	M 4	M 5	M 6	M 8	M 10
k	1,2	1,8	2,4	2,7	3,1	3,8	4,6
dk	4,5	7,0	8,5	11,0	13,0	16,0	20,0
ds	2,8	4,0	5,5	7,0	8,0	10,0	13,0
n	-	0,8	1,0	1,2	1,6	2,0	-
b	-	4,5	6,0	7,0	9,0	11,0	-
l	Range from 2 to 25						

Slotted Shoulder Screws

DIN 927

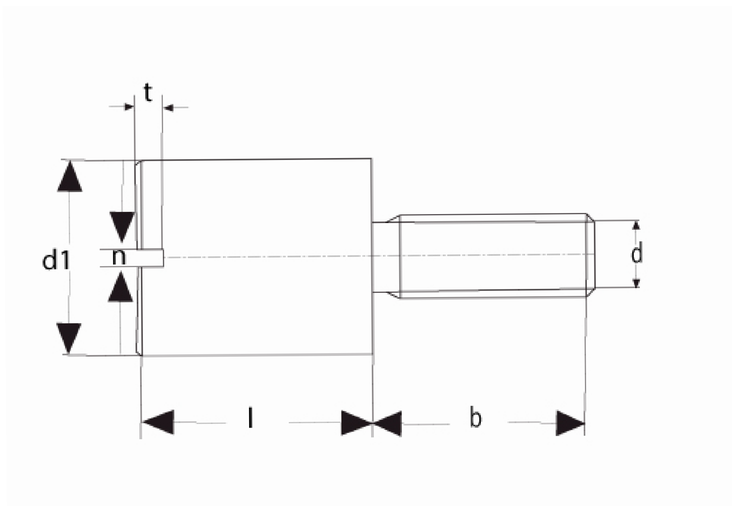

d	M 3	M 4	M 5	M 6
b	4,5	6	7	8
d1	4	5,5	6,5	8
n	0,5	0,6	0,8	1
t	0,8	1,12	1,28	24
l	Range from 3 to 20			

Square Weld Nuts

DIN 928

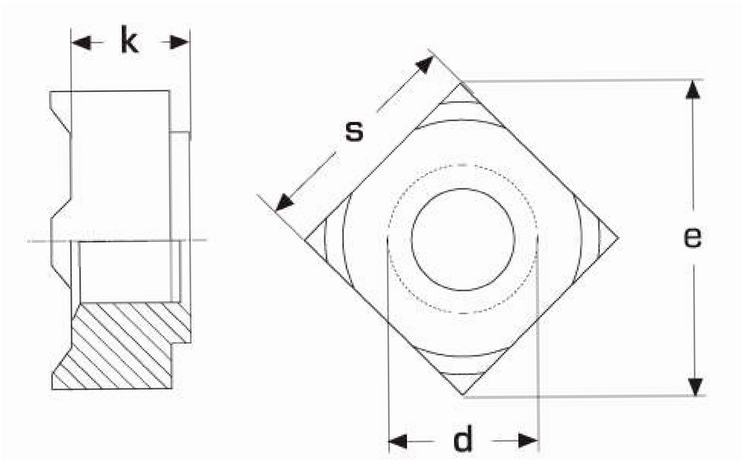

d	M 5	M 6	M 8	M 10	M 12
k	4,2	5,0	6,5	8,0	9,5
e	12	13	18	22	25
s	9	10	14	17	19

Hexagon Weld Nuts

DIN 929

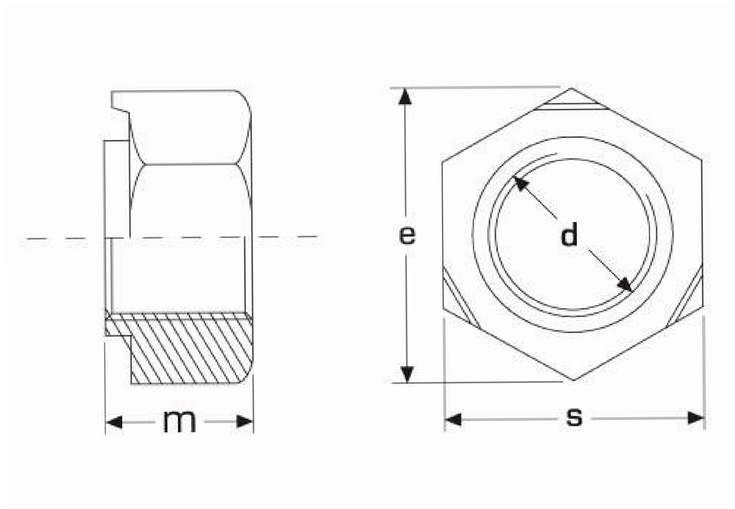

d	M 3	M 4	M 5	M 6	M 8	M 10	M 12	M 16
m	3,0	3,5	4,0	5,0	6,5	8,0	10,0	13,0
e	8,15	9,83	10,95	12,02	15,38	18,74	20,91	26,51
s	7,5	9,0	10,0	11,0	14,0	17,0	19,0	24,0

SRISHAA
MACHINED FASTENERS PVT.LTD.

Hexagon Head Bolts

DIN 931 / ISO 4014

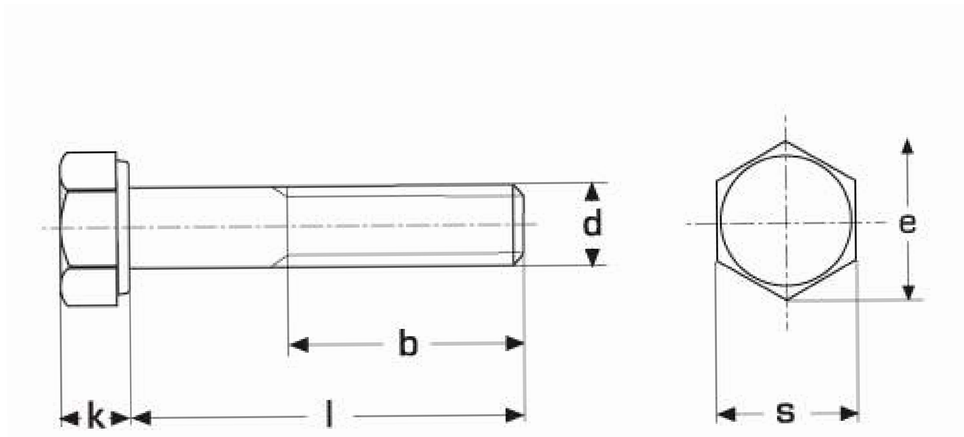

d	M 5	M 6	M 8	M 10	M 12	M 14	M 16	M 18	M 20	M 22
k	3,5	4,0	5,3	6,4	7,5	8,8	10,0	11,5	12,5	14,0
b=<125	16	18	22	26	30	34	38	42	46	50
b>=125	_	24	28	32	36	40	44	48	52	56
e	8,79	11,05	14,38	18,90	21,10	24,49	26,75	30,14	33,53	35,72
s	8	10	13	17	19	22	24	27	30	32
l	Range from 20 to 240									

d	M 24	M 27	M 30	M 33	M 36	M 39	M 42	M 45	M 48	M 52
k	15,0	17,0	18,7	21,0	22,5	25,0	26,0	28,0	30,0	33,0
b=<125	54	60	66	72	78	84	90	96	_	_
b>=125	60	66	72	78	84	90	96	102	108	116
e	39,55	45,20	50,85	55,37	60,79	66,44	69,44	76,95	82,60	88,25
s	36	41	46	50	55	60	65	70	75	80
l	Range from 20 to 240									

Hexagon Head Screws

DIN 933 / ISO 4017

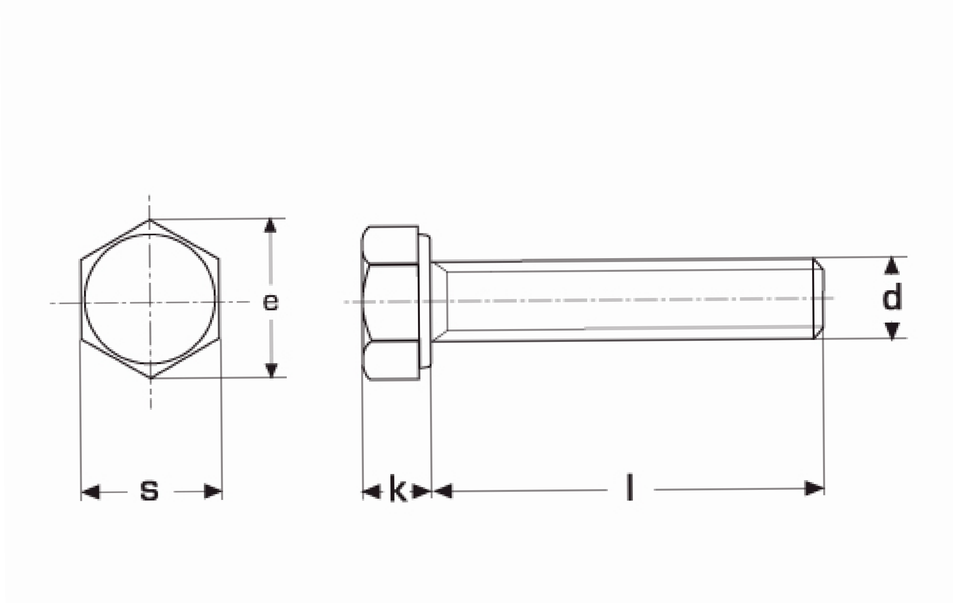

d	M 2	M 2,5	M 3	M 4	M 5	M 6	M 8	M 10	M 12	M 14
k	1,4	1,7	2	2,8	3,5	4	5,3	6,4	7,5	8,8
e	4,32	5,45	6,01	7,66	8,79	11,05	14,38	17,77	20,03	24,49
s	4	5	5,5	7	8	10	13	17	19	22
l	Range from 4 to 200									

d	M 16	M 18	M 20	M 22	M 24	M 27	M 30	M 33	M 36
k	10	11,5	12,5	14	15	17	18,7	21	22,5
e	26,75	30,14	33,53	35,72	39,98	45,2	50,85	55,37	60,79
s	24	27	30	32	36	41	46	50	55
l	Range from 20 to 200								

SRISHAA
MACHINED FASTENERS PVT.LTD.

Hexagon Nuts

DIN 934 / ISO 4032

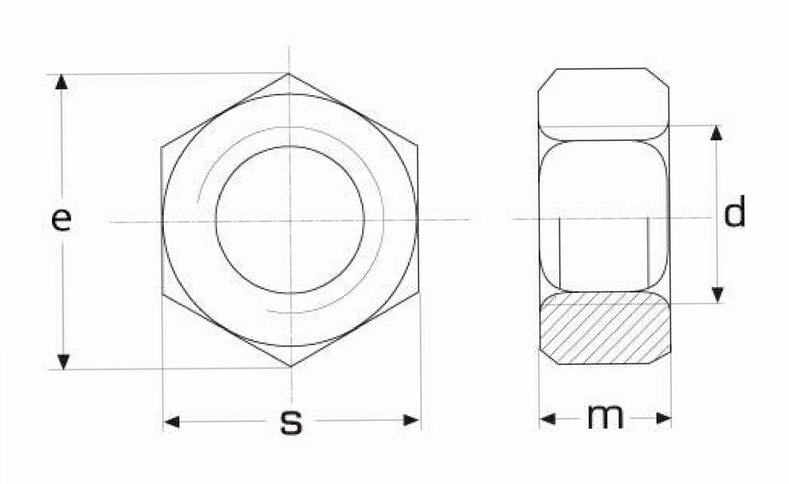

d	s	e	m
M 1	2,5	2,71	0,8
M 1,2	3	3,28	1
M 1,4	3	3,28	1,2
M 1,6	3,2	3,41	1,3
M 1,7	3,5	3,82	1,4
M 2	4	4,32	1,6
M 2,3	4,5	4,88	1,8
M 2,5	5	5,45	2
M 2,6	5	5,45	2
M 3	5,5	6,01	2,4
M 3,5	6	6,58	2,8
M 4	7	7,66	3,2
M 5	8	8,79	4
M 6	10	11,05	5
M 7	11	12,12	5,5
M 8	13	14,38	6,5
M 10	17	18,9	8
M 12	19	21,1	10
M 14	22	24,49	11
M 16	24	26,75	13
M 18	27	29,56	15
M 20	30	32,95	16
M 22	32	35,03	18
M 24	36	39,55	19
M 27	41	45,2	22
M 30	46	50,85	24
M 33	50	55,37	26
M 36	55	60,79	29
M 39	60	66,44	31
M 42	65	71,3	34
M 45	70	76,95	36
M 48	75	82,6	38
M 52	80	88,25	42

SRISHAA
MACHINED FASTENERS PVT.LTD.

Hexagon Castle Nuts, Slotted

DIN 935 / ISO 7035

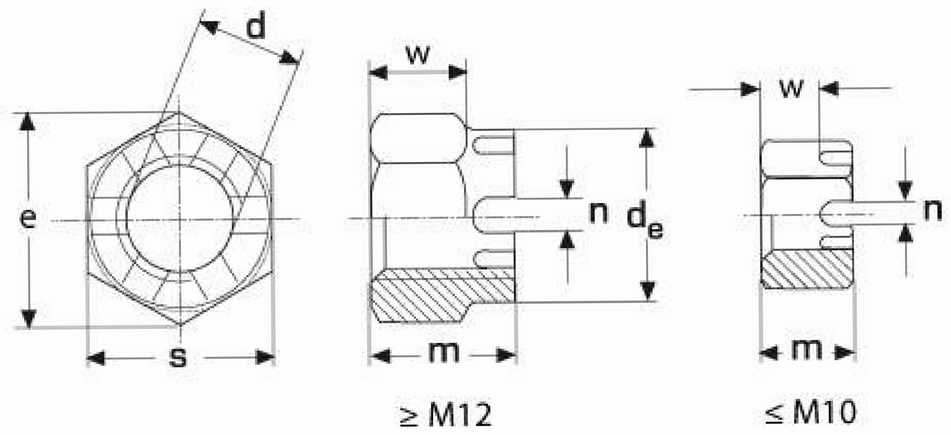

d	m	n	de	w	e	s
M 5	6,0	1,4	-	4,0	8,79	8
M 6	7,5	2,0	-	5,0	11,05	10
M 8	9,5	2,5	-	6,5	14,38	13
M 10	12,0	2,8	-	8,0	17,77	16
M 12	15,0	3,5	17	10,0	20,03	18
M 14	16,0	3,5	19	11,0	23,35	21
M 16	19,0	4,5	22	13,0	26,75	24
M 18	21,0	4,5	25	15,0	29,56	27
M 20	22,0	4,5	28	16,0	32,95	30
M 22	26,0	-	-	18,0	35,03	32
M 24	27,0	5,5	34	19,0	39,55	36
M 27	30,0	5,5	38	22,0	45,20	41
M 30	33,0	7,0	42	24,0	50,85	46
M 36	38,0	7,0	50	29,0	55,80	55

Hexagon Thin Nuts

DIN 936

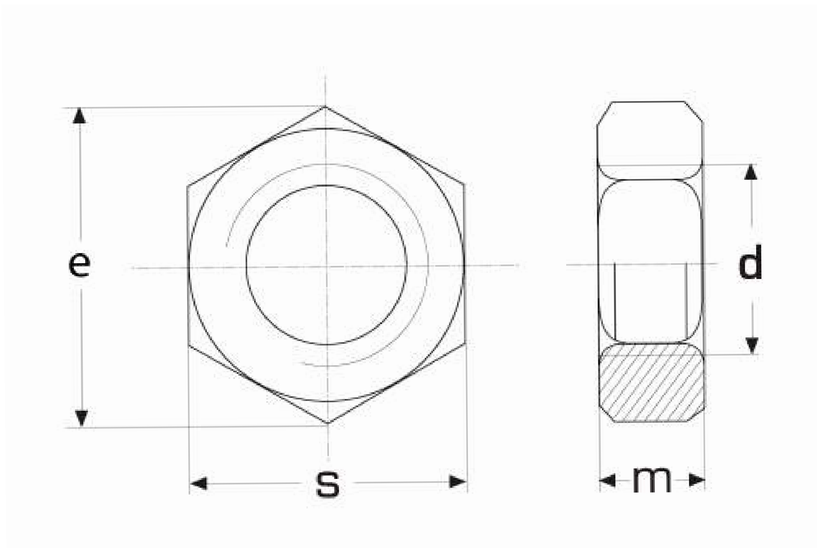

d	m	e	s
M 8	5	14,38	13
M 10	6	18,90	17
M 12	7	21,10	19
M 14	8	24,49	22
M 16	8	26,75	24
M 18	9	29,56	27
M 20	9	32,95	30
M 22	10	35,03	32
M 24	10	39,55	36
M 27	12	45,20	41
M 30	12	50,85	46
M 33	14	55,37	50
M 36	14	60,79	55
M 39	16	66,44	60
M 42	16	71,30	65

SRISHAA
MACHINED FASTENERS PVT.LTD.

Thin Hexagon Castle Nuts, Slotted

DIN 937

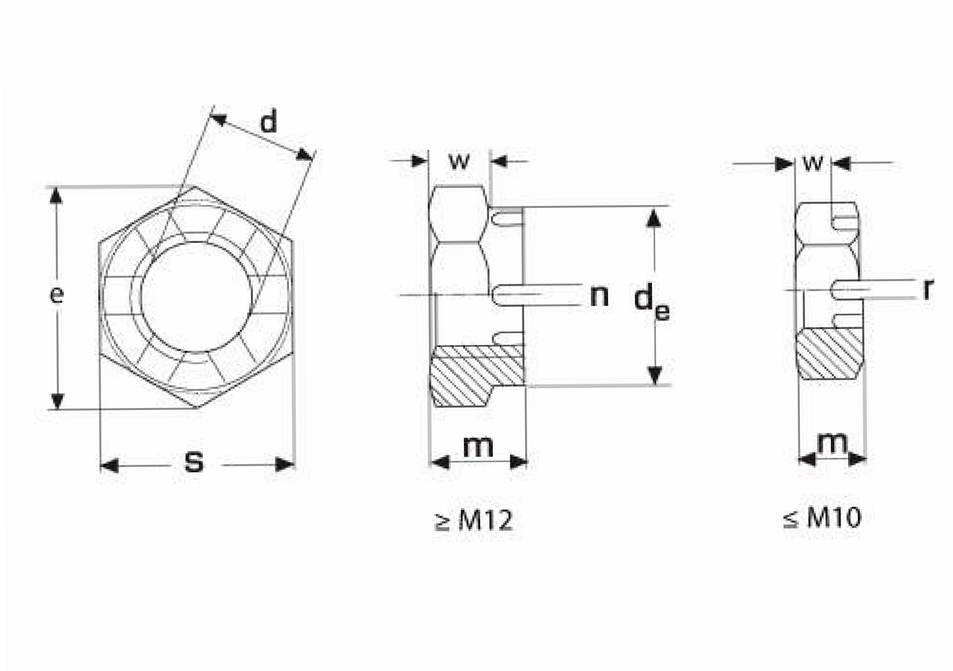

d	m	w	n	de	e	s
M 6	6	3,5	2,0	-	11,05	10
M 8	8	4,5	2,5	-	12,12	13
M 10	9	5,0	2,8	-	18,90	17
M 12	10	6,0	3,5	16,57	20,10	19
M 14	11	7,0	3,5	18,48	24,49	22
M 16	12	7,0	4,5	21,48	26,75	24
M 18	13	8,0	4,5	24,30	29,56	27
M 20	13	8,0	4,5	27,30	32,95	30
M 22	15	9,0	-	-	35,03	32
M 24	15	9,0	5,5	33,00	39,55	36
M 27	17	11,0	5,5	37,00	45,20	41
M 30	18	11,0	7,0	41,00	50,85	46

Studs, Metal end ~ 1d

DIN 938

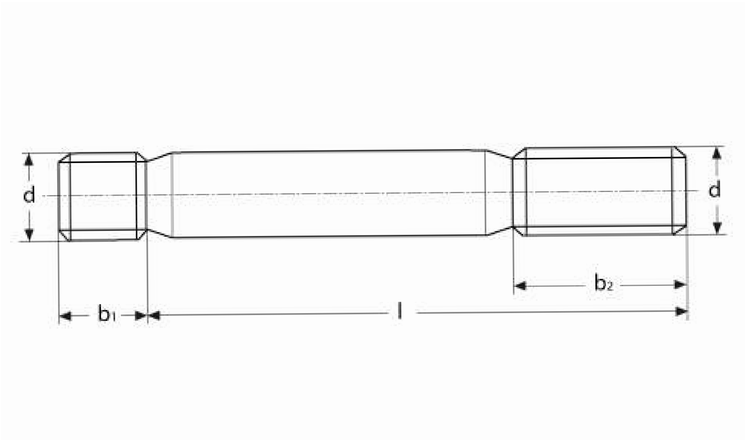

d	M 5	M 6	M 8	M 10	M 12	M 14	M 16	M 18	M 20	M 22	M 24	M 27	M 30
b1	5	6	8	10	12	14	16	18	20	22	24	27	30
b2	16	18	22	26	30	34	38	42	46	50	54	60	66
l	Range from 16 to 120												

Studs, Metal end ~1,25d

DIN 939

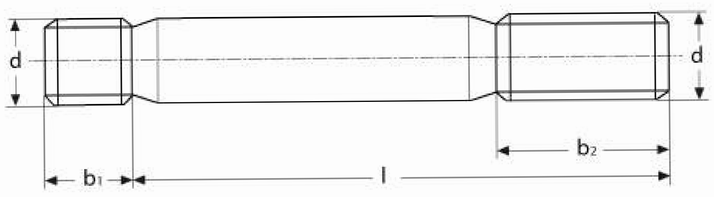

d	M 5	M 6	M 8	M 10	M 12	M 14	M 16	M 18	M 20	M 22	M 24	M 27	M 30
b1	6,5	7,5	10	12	15	18	20	22	25	28	30	35	38
b2	16	18	22	26	30	34	38	42	46	50	54	60	66
l	Range from 16 to 120												

SRISHAA
MACHINED FASTENERS PVT.LTD.

Slotted Countersunk Head Screws

DIN 963 / ISO 2009

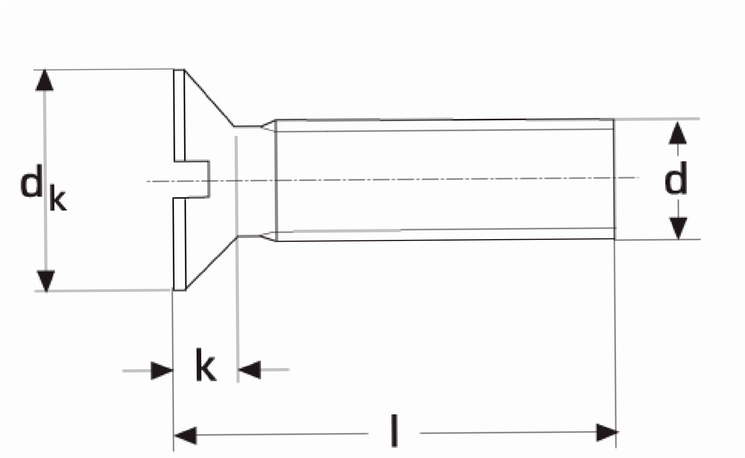

d	M 1	M 1,2	M 1,4	M 1,6	M 1,7	M 2	M 2,3	M 2,5	M 2,6	M 3	M 3,5	M 4	M 5	M 6
dk	1,9	2,3	2,6	3,0	3,0	3,8	4,7	4,7	4,7	5,6	6,5	7,5	9,2	11,0
k	0,60	0,72	0,84	0,96	0,96	1,20	1,50	1,50	1,50	1,65	1,93	2,20	2,50	3,00
l	Range from 2 to 120													

d	M 8	M 10	M 12	M 14	M 16	M 18	M 20
dk	14,5	18,0	22,0	25,0	29,0	33,0	36,0
k	4,0	5,0	6,0	7,0	8,0	9,0	10,0
l	Range from 10 to 160						

Slotted Raised Countersunk Head Screws

DIN 964 / ISO 2010

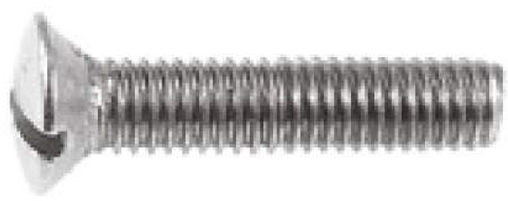

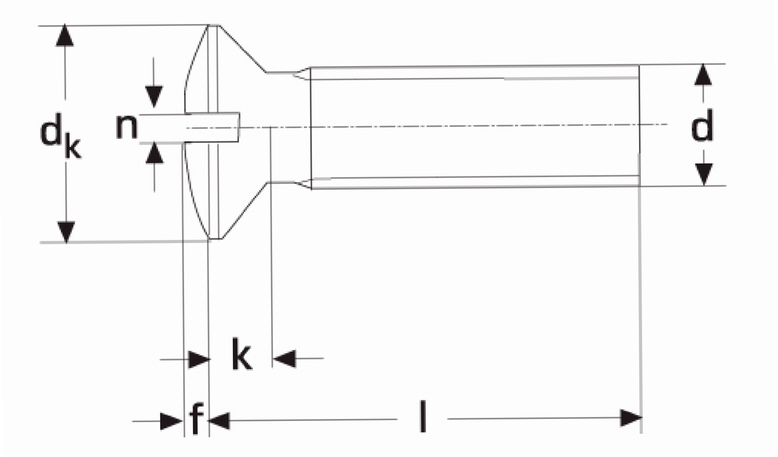

d	M 2	M 2,5	M 3	M 4	M 5	M 6	M 8	M 10
dk	3,8	4,7	5,6	7,5	9,2	11,0	14,5	18,0
k	1,20	1,50	1,65	2,20	2,50	3,00	14,50	18,00
l	Range from 3 to 100							

Cross Recessed Countersunk Head Screws - H

DIN 965 H / ISO 7046

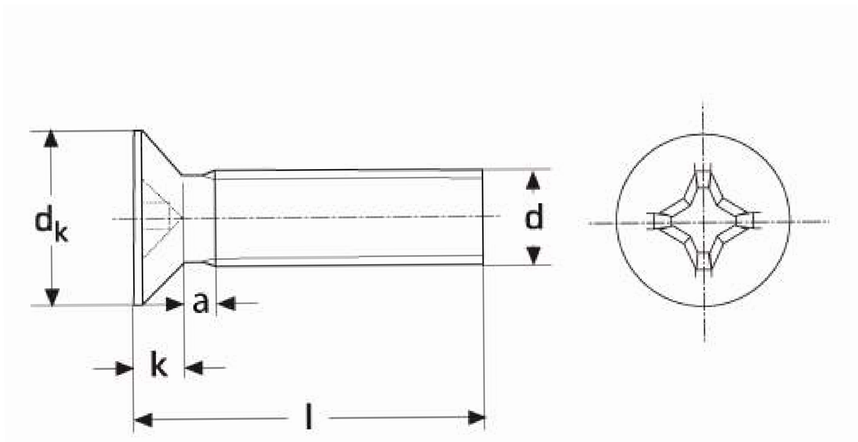

d	M 1,6	M 2	M 2,5	M 3	M 4	M 5	M 6	M 8	M 10
dk	3,0	3,8	4,7	5,6	7,5	9,2	11,0	14,5	18,0
k	0,96	1,20	1,50	1,65	2,20	2,50	3,00	4,00	5,00
a	0,7	0,8	0,9	1,0	1,4	1,6	2,0	2,5	3,0
l	Range from 2 to 130								

Cross Recessed Countersunk Head Screws - Z

DIN 965 Z / ISO 7046

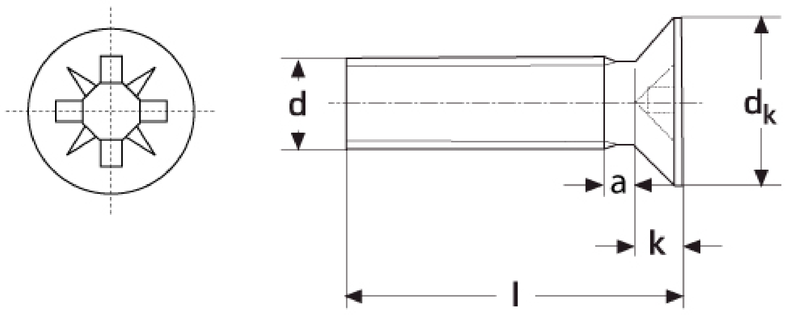

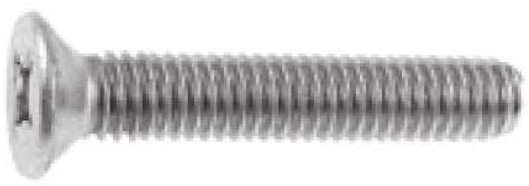

d	M 1,6	M 2	M 2,5	M 3	M 4	M 5	M 6	M 8
dk	3,0	3,8	4,7	5,6	7,5	9,2	11,0	14,5
k	0,96	1,20	1,50	1,65	2,20	2,50	3,00	4,00
a	0,7	0,8	0,9	1,0	1,4	1,6	2,0	2,5
l	Range from 2 to 130							

Countersunk Head Screws, Six Lobe Drive

DIN 965 TX / ISO 7046

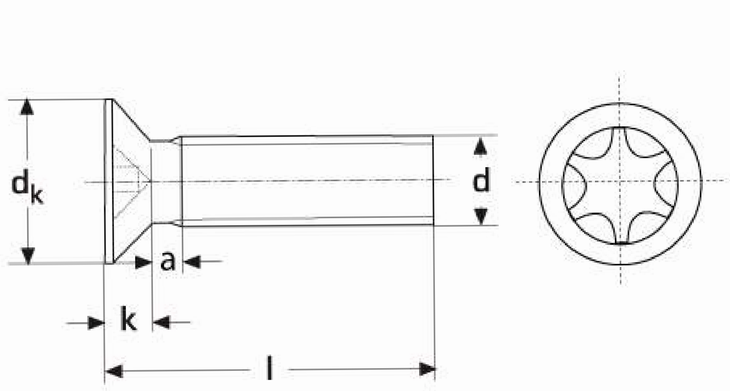

d	M 1,4	M 1,6	M 2	M 2,5	M 3	M 4	M 5	M 6
dk	2,5	3	3,8	4,7	5,6	7,5	9,2	11
k	0,7	0,96	1,2	1,5	1,65	2,2	2,5	3
a	0,3	0,5	0,7	0,9	1	1,4	1,6	2
Torx	TX 5	TX 5	TX 5	TX 8	TX 10	TX 20	TX 25	TX 30

Cross Recessed Raised Countersunk Head Screws - H

DIN 966 H / ISO 7047

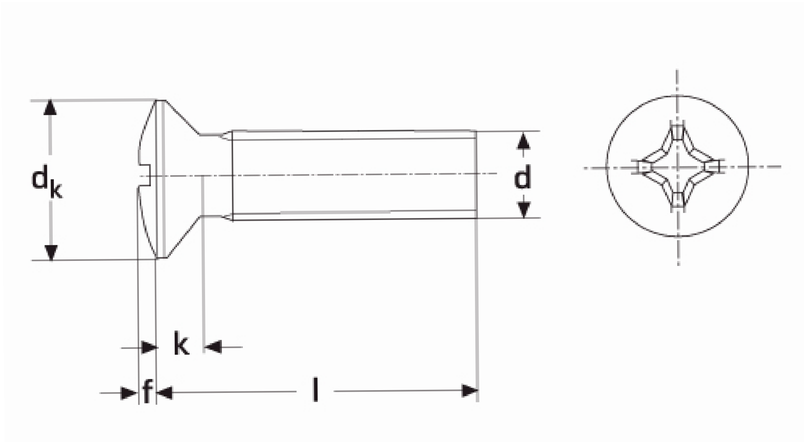

d	M 2	M 2,5	M 3	M 4	M 5	M 6	M 8
dk	3,8	4,7	5,6	7,5	9,2	11,0	14,5
f	0,50	0,60	0,75	1,00	1,25	1,50	2,00
k	1,20	1,50	1,65	2,20	2,50	3,00	4,00
l	Range from 3 to 100						

Cross Recessed Raised Countersunk Head Screws - Z

DIN 966 Z / ISO 7047

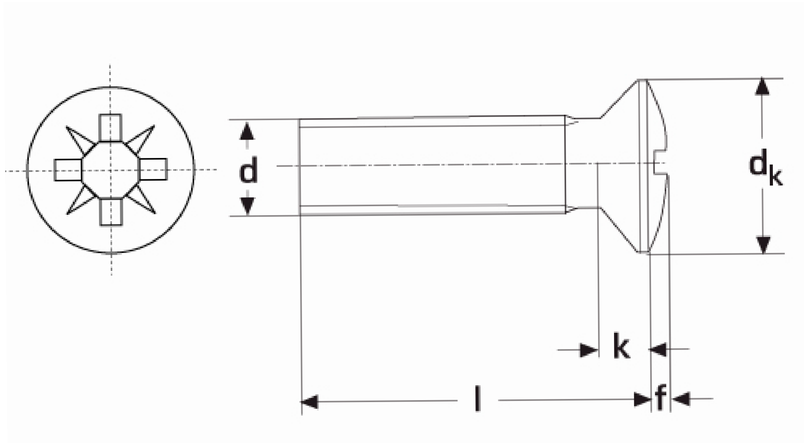

d	M 2	M 2,5	M 3	M 4	M 5	M 6	M 8
dk	3,8	4,7	5,6	7,5	9,2	11,0	14,5
f	0,50	0,60	0,75	1,00	1,25	1,50	2,00
k	1,20	1,50	1,65	2,20	2,50	3,00	4,00
l	Range from 3 to 100						

Threaded Rods

DIN 975

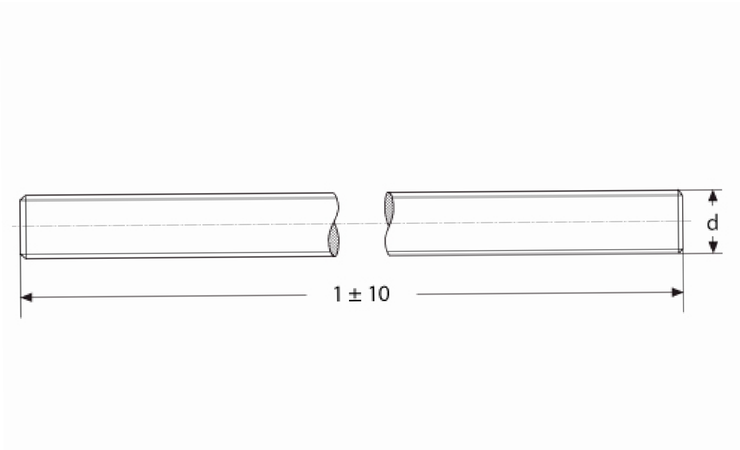

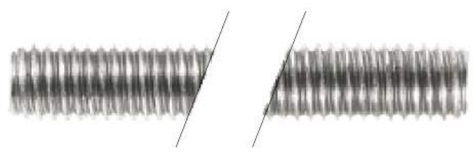

d	M 2	M 2,5	M 3	M 4	M 5	M 6	M 8	M 10	M 12	M 14	M 16	M 18

d	M 20	M 22	M 24	M 27	M 30	M 33	M 36	M 39	M 42	M 45	M 48	M 52

Threaded Rods

DIN 976

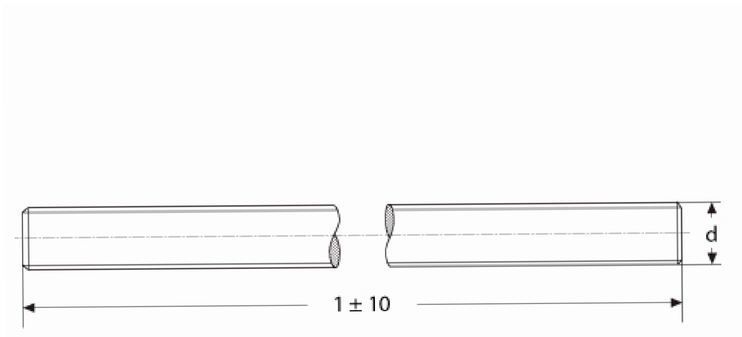

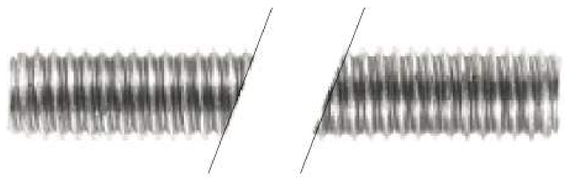

d	M 2	M 2,5	M 3	M 4	M 5	M 6	M 8	M 10	M 12	M 14	M 16	M 18

d	M 20	M 22	M 24	M 27	M 30	M 33	M 36	M 39	M 42	M 45	M 48	M 52

Thin Hexagon Castle Nuts , Slotted

DIN 979 / ISO 7038

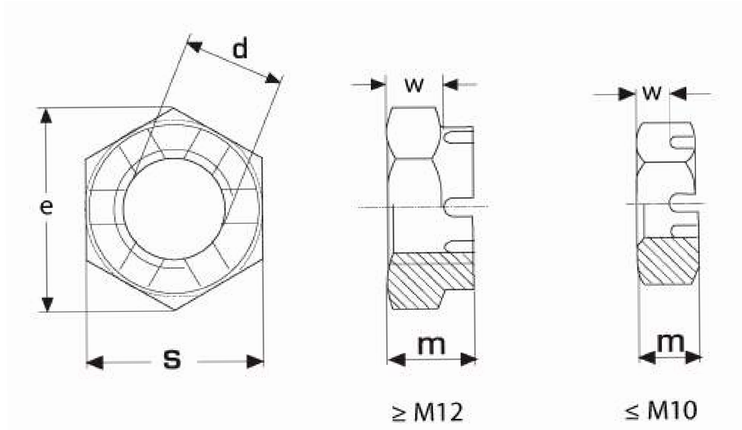

d	M 6	M 8	M 10	M 12	M 14	M 16	M 18	M 20	M 24	M 27	M 30
m	5,0	6,4	8,0	10,0	11,0	13,0	15,0	16,0	19,0	22,0	24,0
w	2,5	3,5	4,0	5,0	6,0	7,0	9,0	10,0	11,0	14,0	15,0
e	11,05	14,38	17,77	20,03	23,35	26,75	29,56	32,95	39,55	45,20	50,85
s	10	13	16	18	21	24	27	30	36	41	46

Hexagon nuts with clamping part, all metal nut

DIN 980 / ISO 7047

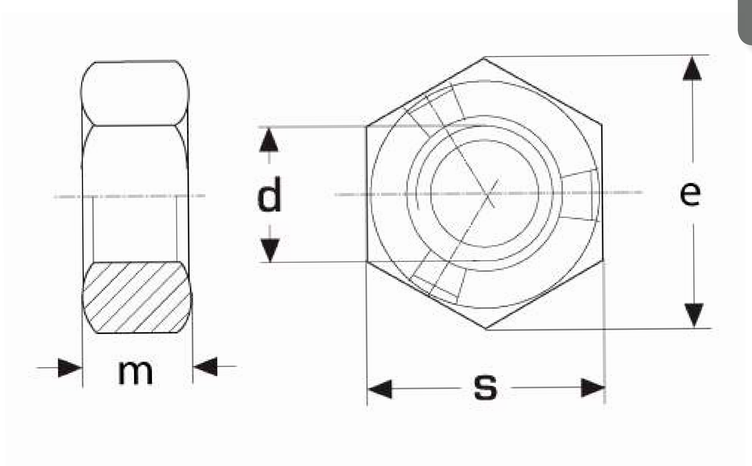

d	M 3	M 4	M 5	M 6	M 7	M 8	M 10	M 12	M 16	M 20	M 22	M 24
m	1,65	2,20	2,75	3,30	3,85	4,40	5,50	6,60	8,80	11,00	12,20	13,20
e	6,01	7,66	8,79	11,05	12,12	14,38	18,90	21,10	26,75	32,95	35,03	39,55
s	5,5	7,0	8,0	10,0	11,0	13,0	17,0	19,0	24,0	30,0	32,0	36,0

Prevailing Torque Type Hexagon Nuts, High Type

DIN 982 / ISO 7040

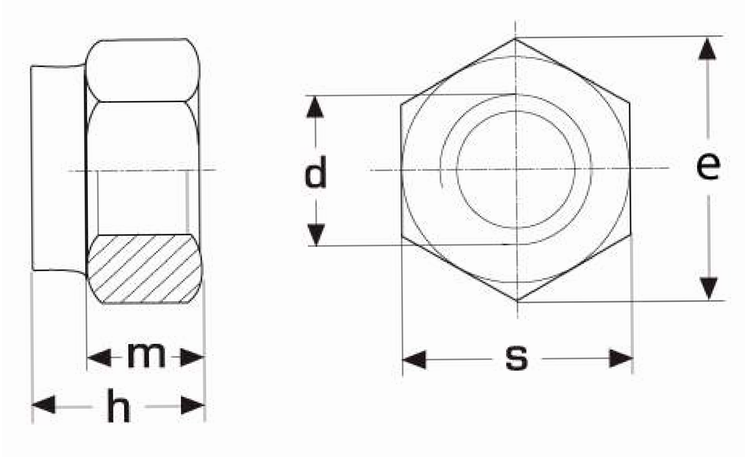

d	m	h	e	s
M 4	3,60	4,7	7,66	7
M 5	4,40	6,3	8,79	8
M 6	4,90	8,0	11,05	10
M 8	6,44	9,5	14,38	13
M 10	8,04	11,5	18,90	17
M 12	10,37	14,0	21,10	19
M 14	12,10	16,0	24,49	22
M 16	14,10	18,0	26,75	24
M 20	16,90	22,0	32,95	30
M 24	20,20	28,0	39,55	36

Prevailing Torque Type Hexagon Nuts, Low Type

DIN 985

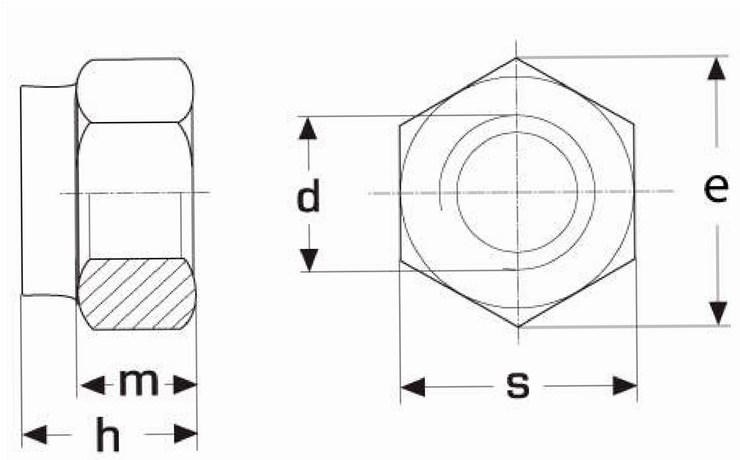

d	m	h	e	s
M 2,5	3,5	3,5	5,50	5,0
M 3	2,4	4,0	6,01	5,5
M 4	2,9	5,0	7,66	7,0
M 5	3,2	5,0	8,79	8,0
M 6	4,0	6,0	11,05	10,0
M 8	5,5	8,0	14,38	13,0
M 10	6,5	10,0	18,90	17,0
M 12	8,0	12,0	21,10	19,0
M 14	9,5	14,0	24,49	22,0
M 16	10,5	16,0	26,75	24,0
M 18	13,0	18,5	29,56	27,0
M 20	14,0	20,0	32,95	30,0
M 22	15,0	22,0	35,03	32,0
M 24	15,0	24,0	39,55	36,0
M 27	17,0	27,0	45,20	41,0
M 30	19,0	30,0	50,85	46,0
M 36	25,0	36,0	60,79	55,0

Prevailing Torque Type Hexagon Domed Cap Nuts

DIN 986

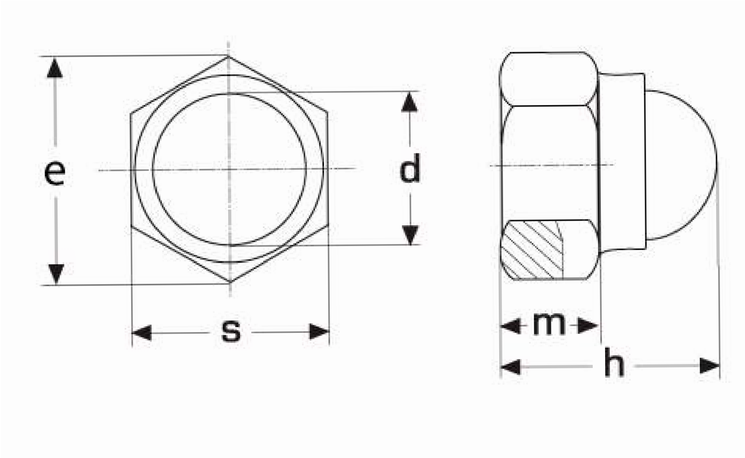

d	M 4	M 5	M 6	M 8	M 10	M 12	M 14	M 16	M 20
s	7	8	10	13	17	19	22	24	30
e	7,66	8,79	11,05	14,38	18,90	21,10	24,49	26,75	32,95
m	2,90	4,40	4,90	6,44	8,04	10,37	12,10	14,10	16,90
h	9,6	10,5	12,0	14,0	18,1	22,5	26,4	27,5	35,0

Shim Rings and Supporting Rings

DIN 988

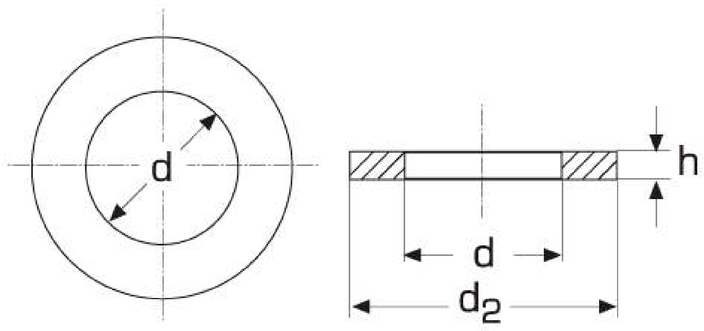

d	3	3	4	4	4	4	4	5	5	5	5	5	5	5
d2	5	6	8	8	8	8	8	10	10	10	10	10	12	12
h	0,1	0,1	0,1	0,2	0,3	0,5	1,0	0,1	0,2	0,3	0,5	1,0	0,2	0,5

Shim Rings and Supporting Rings

DIN 988

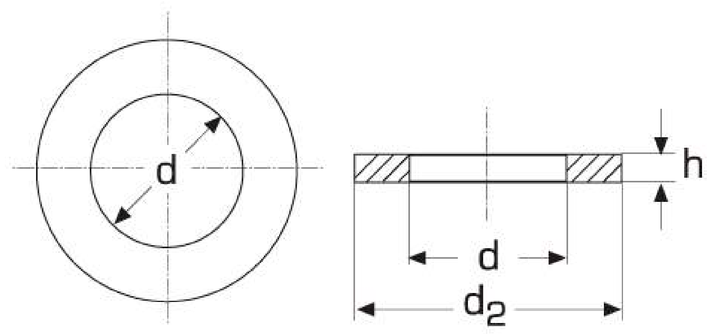

d	6	6	6	6	6	8	8	8	8	8	10	10	10	10	10
d2	12	12	12	12	12	14	14	14	14	14	16	16	16	16	16
h	0,1	0,2	0,3	0,5	1,0	0,1	0,2	0,3	0,5	1,0	0,1	0,2	0,3	0,5	1,0

d	11	11	12	12	12	12	12	13	13	14	14	14	14	14	15
d2	17	17	18	18	18	18	18	19	19	20	20	20	20	20	21
h	0,2	1,0	0,1	0,2	0,3	0,5	1,0	0,2	1,0	0,1	0,2	0,3	0,5	1,0	0,1

d	15	15	15	15	15	15	15	16	16	16	16	16	17	17	17
d2	21	21	21	21	21	22	22	22	22	22	22	22	24	24	24
h	0,2	0,3	0,5	1,0	2,0	0,5	1,0	0,1	0,2	0,3	0,5	1,0	0,3	0,5	1,0

d	17	18	18	20	20	20	20	20	22	22	25	25	25	25	25
d2	24	25	25	28	28	28	28	28	30	30	35	35	35	35	35
h	1,5	0,2	1,0	0,1	0,2	0,3	0,5	1,0	0,1	0,5	0,1	0,2	0,3	0,5	1,0

Shim Rings and Supporting Rings

DIN 988

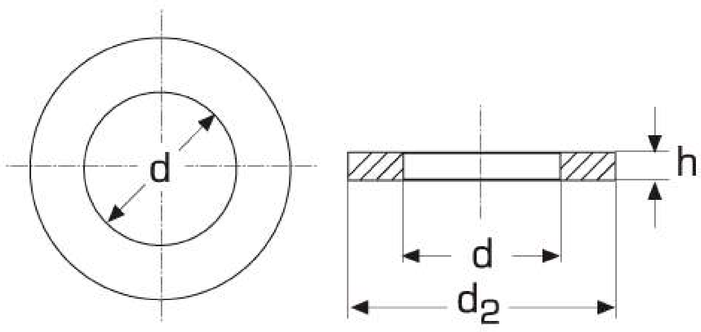

d	25	28	28	30	30	30	35	35	35	40	40	40	45	48	48	50
d2	35	40	40	42	42	42	45	45	45	50	50	50	55	60	60	62
h	1,5	0,1	0,5	0,1	0,5	1,0	0,3	0,5	1,0	0,1	0,5	1,0	3,0	1,0	3,0	0,2

Washers for Wood Construction

DIN 1052

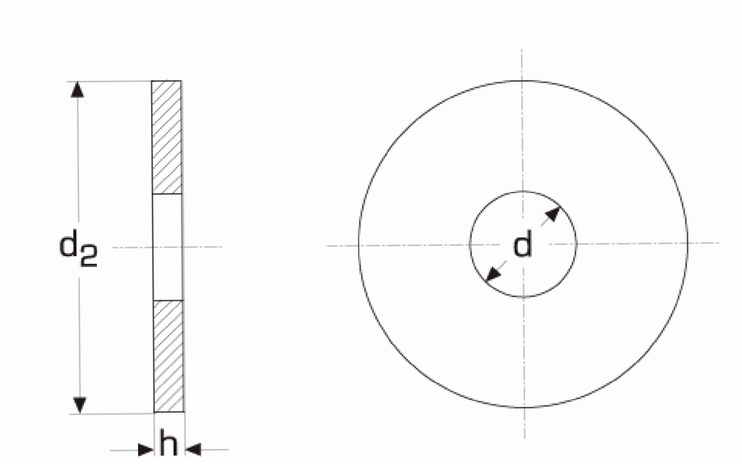

for thread	M 12	M 16	M 20	M 22	M 24
d	14	18	23	25	27
d2	58	68	80	92	105
h	6	6	8	8	8

SRISHAA
MACHINED FASTENERS PVT.LTD.

Washers for Clevis Pins, Finish Medium

DIN 1440 / ISO 8738

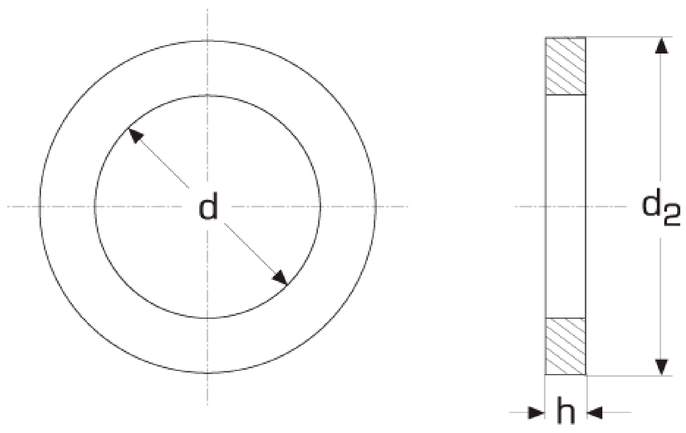

d	d2	h
3	6	0,8
4	8	0,8
5	10	0,8
6	12	1,6
7	14	1,6
8	16	2,0
10	20	2,5
12	25	3,0
13	25	3,0
14	28	3,0
16	28	3,0
18	30	4,0
20	32	4,0
22	34	4,0
23	36	4,0
24	38	4,0
25	40	4,0
26	40	5,0
27	40	5,0
28	42	5,0
30	45	5,0
32	50	5,0
33	50	5,0
35	52	6,0
36	52	6,0
40	58	6,0

SRISHAA
MACHINED FASTENERS PVT.LTD.

Washers for Clevis Pins, Finish Coarse

DIN 1441

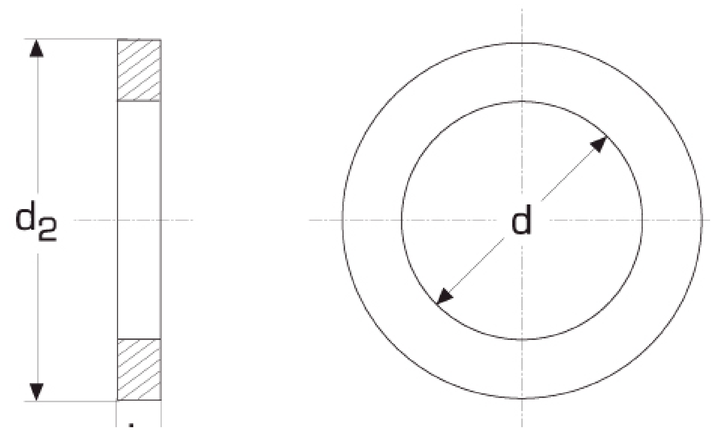

d	d2	h
5,5	10	0,8
7	12	1,6
8	14	1,6
9	16	2,0
11	20	2,5
13	25	3,0
14	25	3,0
15	28	3,0
17	28	3,0
19	30	4,0
21	32	4,0
23	34	4,0
24	36	4,0
25	38	4,0
26	40	4,0
27	40	5,0
28	40	5,0
29	42	5,0
31	45	5,0

Grooved Pins, Full Taper Grooved

DIN 1471 / ISO 8744

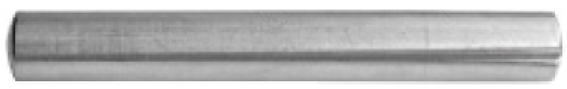

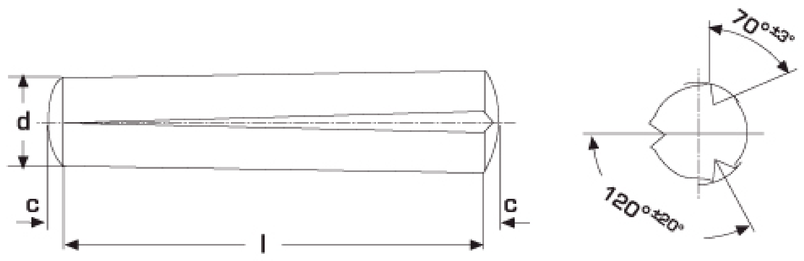

d	2,0	2,5	3,0	4,0	5,0	6,0	8,0
c	0,25	0,30	0,40	0,50	0,63	0,80	1,00
l	Range from 6 to 60						

Grooved Pins, Half Taper Grooved

DIN 1472 / ISO 8745

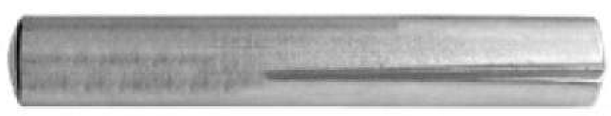

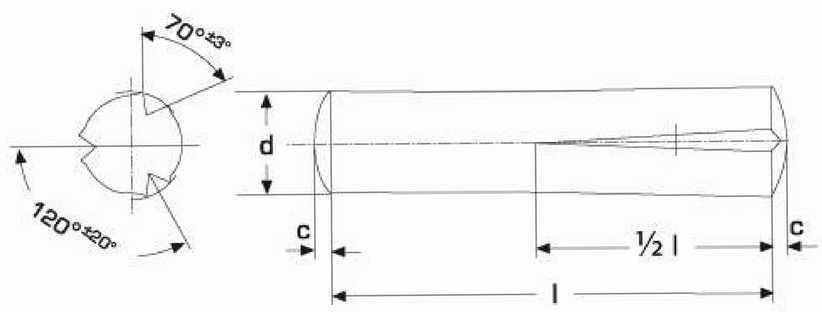

d	2,0	2,5	3,0	4,0	5,0	6,0	8,0	10,0	12,0
c	0,25	0,30	0,40	0,50	0,60	0,80	1,00	1,20	1,60
l	Range from 3 to 60								

Grooved Pins, Full Grooved with Chamfer

DIN 1473 / ISO 8740

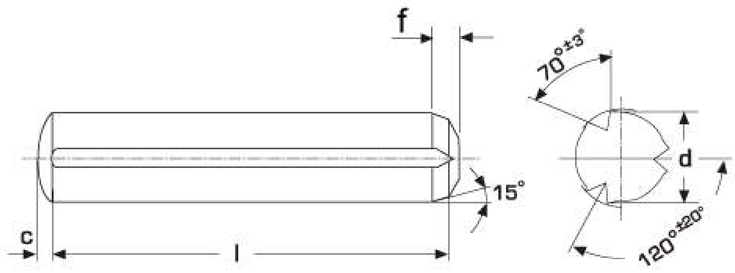

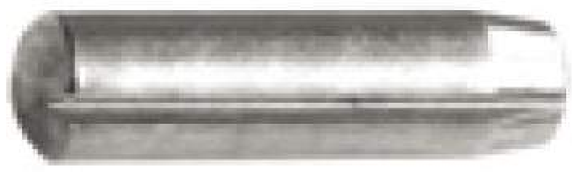

d	2,0	2,5	3,0	4,0	5,0	6,0	8,0	10,0
c	0,25	0,30	0,40	0,50	0,60	0,80	1,00	1,20
f	0,9	1,2	1,3	1,8	2,0	2,5	2,8	3,5
l	Range from 5 to 80							

Grooved Pins, Full Length Parallel

DIN 1474 / ISO 8741

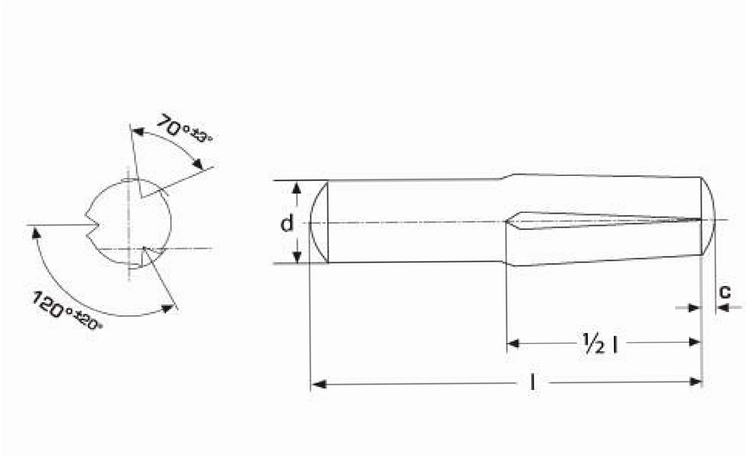

d	2	3	4	5	6	8	10
c	0,25	0,30	0,40	0,50	0,60	0,80	1,00
l	Range from 6 to 60						

Grooved Pins, Round Head

DIN 1476 / ISO 8746

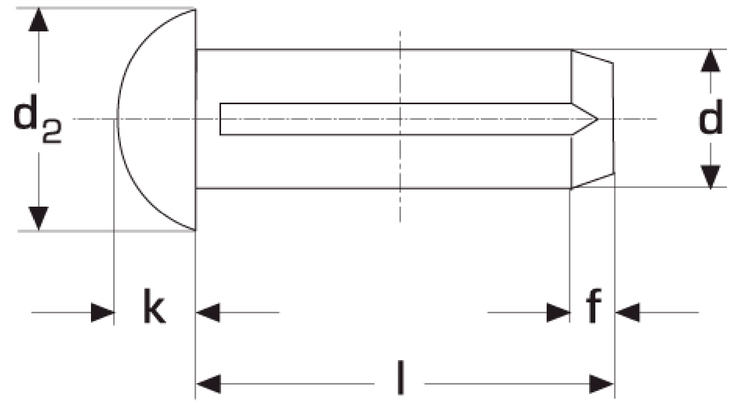

d	1,4	2,0	2,5	3,0	4,0	10
d2	2,40	3,70	4,60	5,45	7,25	9,10
k	0,80	1,30	1,60	1,95	2,55	3,15
f	0,5	0,5	0,7	1,0	1,5	1,5
l	Range from 3 to 25					

Spring-Type Straight Pins (Roll Pins)- Heavy Type

DIN 1481 / ISO 8752

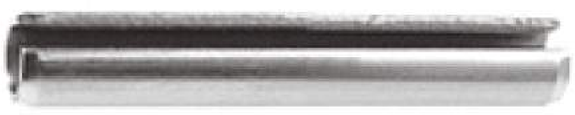

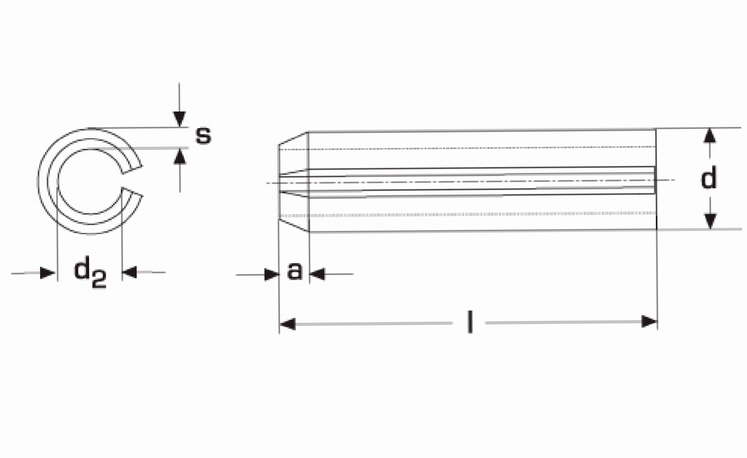

d	1,0	1,5	2,0	2,5	3,0	3,5	4,0	4,5	5,0	6,0	8,0	10,0	12,0
d2	0,8	1,1	1,5	1,8	2,1	2,3	2,8	2,9	3,4	3,9	5,5	6,5	7,5
a	0,15	0,25	0,35	0,40	0,50	0,60	0,65	0,80	0,90	1,20	2,00	2,00	2,00
s	0,20	0,30	0,40	0,50	0,60	0,75	0,80	1,00	1,00	1,25	1,50	2,00	2,50
l	Range from 4 to 120												

SRISHAA
MACHINED FASTENERS PVT.LTD.

Hexagon Domed Cap Nuts, High Type

DIN 1587

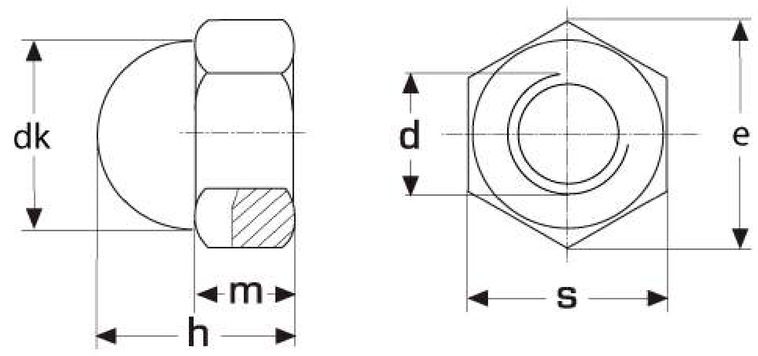

d	dk	h	m	e	s
M 3	5,5	7	2,4	6,01	5,5
M 4	6,5	8	3,2	7,50	7,0
M 5	7,5	10	4,0	8,63	8,0
M 6	9,5	12	5,0	10,89	10,0
M 7	9,5	12	5,0	10,89	13,0
M 8	12,5	15	6,5	14,20	13,0
M 10	16,5	18	8,0	17,59	17,0
M 12	18,0	22	10,0	19,85	19,0
M 14	21,0	25	11,0	22,78	22,0
M 16	23,0	28	13,0	26,17	24,0
M 18	26,0	32	15,0	29,56	27,0
M 20	28,0	34	16,0	32,95	30,0
M 22	33,0	39	18,0	35,03	34,0
M 24	34,0	42	19,0	39,55	36,0
M 27	40,0	47	20,0	47,30	41,0
M 30	42,0	52	24,0	52,00	46,0

Disc Springs

DIN 2093

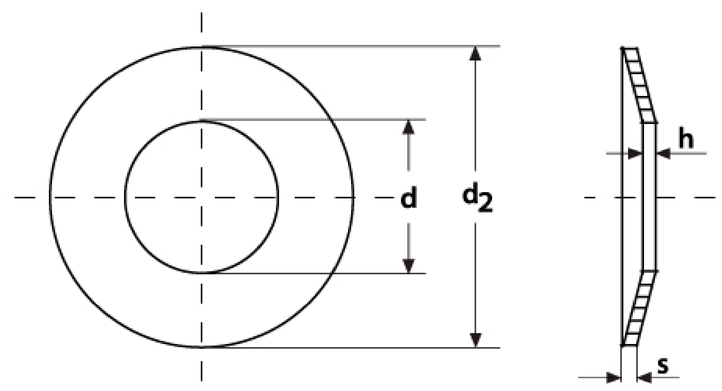

d	d2	h	s
3,2	8,0	0,45	0,30
3,2	8,0	0,70	0,50
4,2	8,0	0,55	0,30
4,2	8,0	0,60	0,40
4,2	12,0	0,80	0,40
4,2	12,0	0,80	0,50
5,2	10,0	0,70	0,40
5,2	10,0	0,75	0,50
6,1	12,5	0,85	0,70
6,2	12,0	0,85	0,50
6,2	12,5	0,85	0,50
6,2	18,0	1,20	0,40
7,2	14,0	1,10	0,80
8,2	15,0	1,25	0,80
8,2	16,0	1,05	0,40
8,2	16,0	1,25	0,60
8,2	16,0	1,25	0,90
8,2	20,0	1,15	0,50
9,2	18,0	1,40	0,70
9,2	18,0	1,40	1,00

Disc Springs

DIN 2093

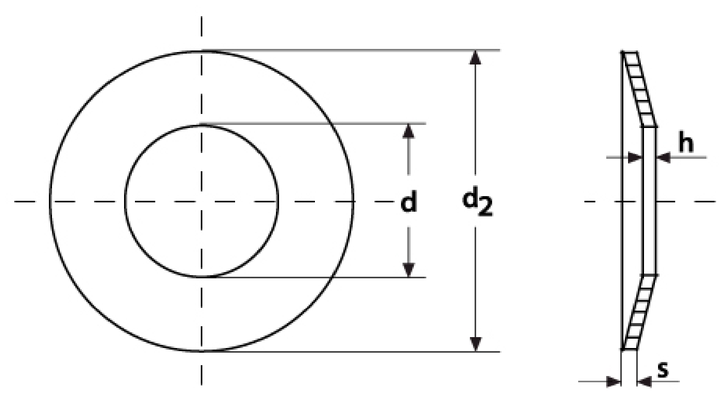

d	d2	h	s
10,2	20,0	1,20	0,60
10,2	20,0	1,35	0,80
10,2	20,0	1,40	0,90
10,2	20,0	1,55	1,00
10,2	20,0	1,55	1,10
12,2	25,0	1,60	0,90
12,2	25,0	1,90	1,50
14,2	28,0	1,80	1,00
14,2	28,0	2,15	1,50
16,3	31,5	2,00	1,25
16,3	31,5	2,30	1,75
18,3	35,5	2,15	1,25
18,3	35,5	2,65	2,00
20,4	40,0	2,45	1,50
20,4	40,0	2,80	2,00
20,4	40,0	2,95	2,25

Hose Clamps

DIN 3017

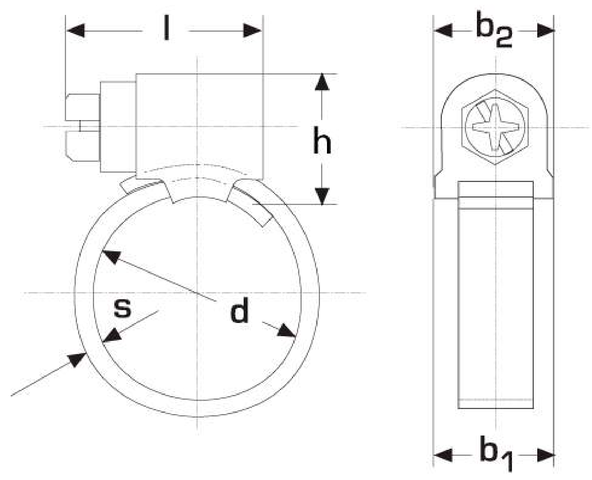

d	b1	b2	l	h	s
10 - 16	9	14	21	14	0,6
12 - 22	9	14	24	14	0,7
16 - 27	9	14	24	14	0,7
20 - 32	9	14	24	14	0,7
25 - 40	9	14	24	14	0,7
30 - 45	9	14	24	14	0,7
35 - 50	9	14	24	14	0,7
40 - 60	9	14	24	14	0,7
50 - 70	9	14	24	14	0,7

d	b1	b2	l	h	s
12 - 22	12	20	31	16	0,8
16 - 27	12	20	31	16	0,8
20 - 32	12	20	31	16	0,8
25 - 40	12	20	31	16	0,8
30 - 45	12	20	31	16	0,8
35 - 50	12	20	31	16	0,8
40 - 60	12	20	31	16	1,0
50 - 70	12	20	31	16	1,0
60 - 80	12	20	31	16	1,0
70 - 90	12	20	38	16	1,0
80 - 100	12	20	38	16	1,0
90 - 110	12	20	38	16	1,0
100 - 120	12	20	38	16	1,0
110 - 130	12	20	38	16	1,0
120 - 140	12	20	38	16	1,0
130 - 150	12	20	38	16	1,0
140 - 160	12	20	38	16	1,0

Hexagon Nuts (m = 1,5d)

DIN 6330

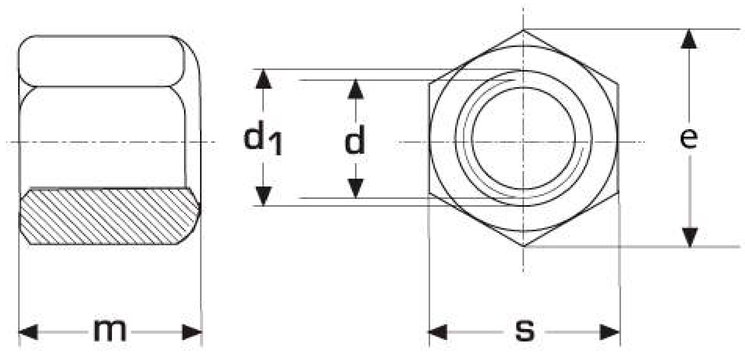

d	M 6	M 8	M 10	M 12	M 14	M 16	M 20	M 24	M 27	M 30	M 33	M 36	M 42
d1	7,0	9,0	11,5	14,0	16,0	18,0	22,0	26,0	29,0	32,0	35,0	38,0	44,0
m	9	12	15	18	21	24	30	36	39	45	48	54	63
e	11,05	14,38	17,77	20,03	24,20	26,75	33,53	39,98	45,20	51,28	55,85	61,31	72,61
s	10	13	16	18	22	24	30	36	41	46	46	55	55

Hexagon Nuts with Collar (m = 1,5d)

DIN 6331

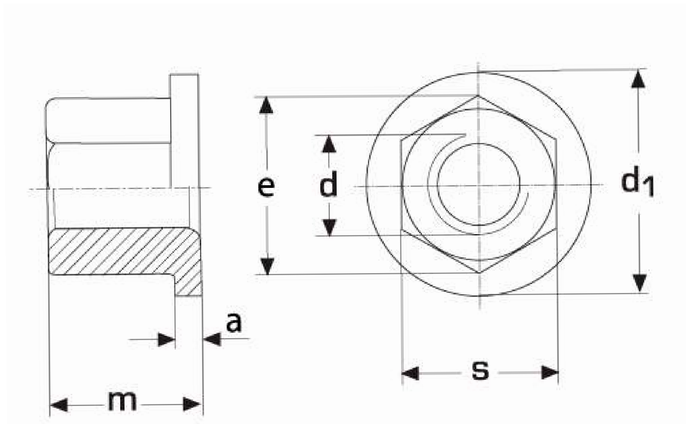

d	M 6	M 8	M 10	M 12	M 14	M 16	M 20	M 24	M 30	M 36
d1	14	18	22	25	28	31	37	45	58	68
m	9	12	15	18	21	24	30	36	45	54
a	3,0	3,5	4,0	4,0	5,0	5,0	6,0	6,0	8,0	10,0
e	11,05	14,38	17,77	20,03	23,39	26,75	33,53	39,53	51,28	61,31
s	10	13	16	18	21	24	30	36	46	55

Hexagon Nuts
(m = 3d)

DIN 6334

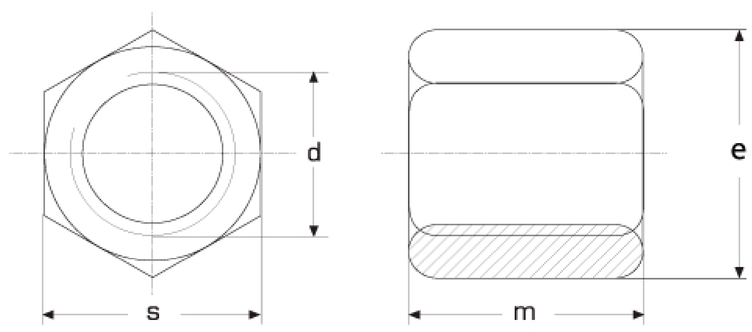

d	M 5	M 6	M 8	M 10	M 12	M 14	M 16	M 20	M 24	M 30
m	15	18	24	30	36	42	48	60	72	90
e	9,0	11,1	15,0	19,6	21,9	24,5	27,7	34,6	41,6	53,1
s	8	10	13	17	19	22	24	30	36	46

Conical Spring Washers
for Bolted Connections

DIN 6796

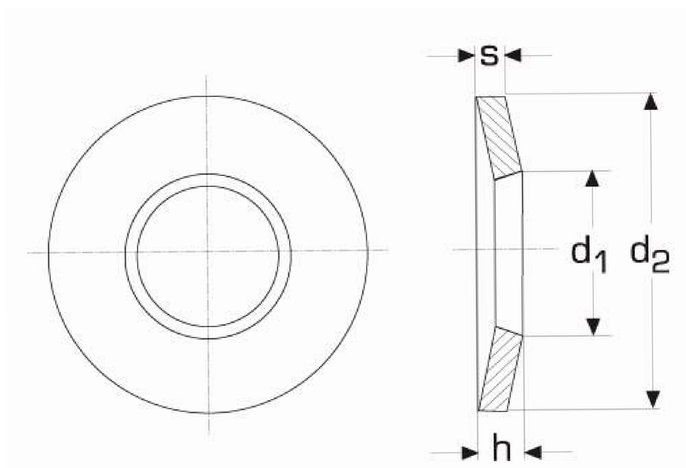

d1	3,2	4,3	5,3	6,4	8,4	10,5	13,0	15,0	17,0	19,0	21,0	23,0	25,0
d2	7	9	11	14	18	23	29	35	39	42	45	49	56
h	0,85	1,30	1,55	2,00	2,60	3,20	3,95	4,65	5,25	5,80	6,40	7,05	7,75
s	0,6	1,0	1,2	1,5	2,0	2,5	3,0	3,5	4,0	4,5	5,0	5,5	6,0

Toothed Lock Washers

DIN 6797

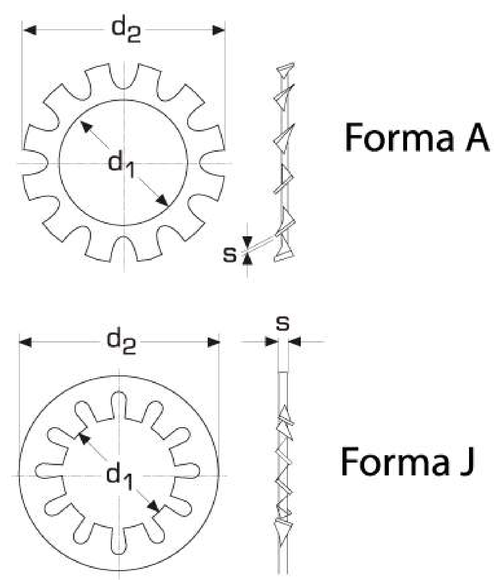

for thread	d1	d2	s
M 2	2,2	4,5	0,3
M 2,3	2,5	5	0,4
M 2,5	2,7	5,5	0,4
M 3	3,2	6	0,4
M 3,5	3,7	7	0,5
M 4	4,3	8	0,5
M 5	5,1	9	0,5
M 5	5,3	10	0,6
M 6	6,4	11	0,7
M 7	7,4	12,5	0,8
M 8	8,2	14	0,8
M 8	8,4	15	0,8
M 10	10,5	18	0,9
M 12	13	20,5	1
M 14	15	24	1
M 16	17	26	1,2
M 18	19	30	1,4
M 20	21	33	1,4
M 22	23	36	1,5
M 24	25	38	1,5
M 27	28	44	1,6
M 30	31	48	1,6

Serrated Lock Washers

DIN 6798

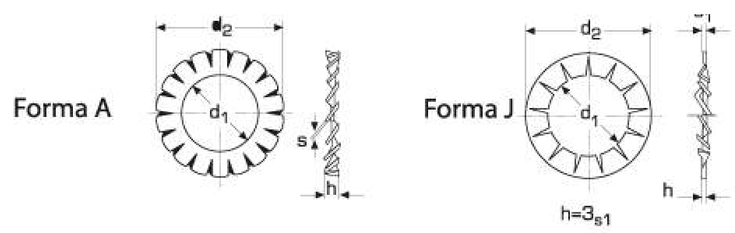

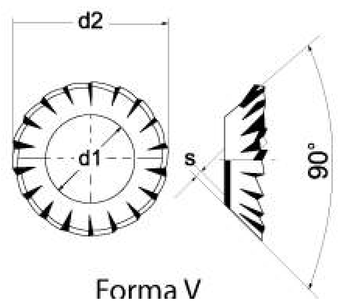

for thread	d1	d2	s
M 2	2,2	4,5	0,3
M 2,3	2,5	5	0,4
M 2,5	2,7	5,5	0,4
M 3	3,2	6	0,4
M 3,5	3,7	7	0,5
M 4	4,3	8	0,5
M 5	5,1	9	0,5
M 5	5,3	10	0,6
M 6	6,4	11	0,7
M 7	7,4	12,5	0,8
M 8	8,2	14	0,8
M 8	8,4	15	0,8
M 10	10,5	18	0,9
M 12	13	20,5	1
M 14	15	24	1
M 16	17	26	1,2
M 18	19	30	1,4
M 20	21	33	1,4
M 22	23	36	1,5
M 24	25	38	1,5
M 27	28	44	1,6
M 30	31	48	1,6

SRISHAA
MACHINED FASTENERS PVT.LTD.

Retaining Washers for Shafts

DIN 6799

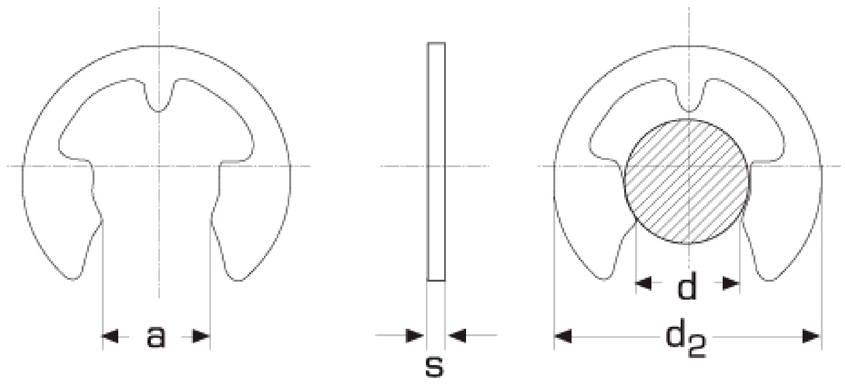

d1	d2	a	s
1,2	3,25	1,01	0,30
1,5	4,25	1,28	0,40
1,9	4,80	1,61	0,50
2,3	6,30	1,94	0,60
3,2	7,30	2,70	0,60
4,0	9,30	3,34	0,70
5,0	11,30	4,11	0,70
6,0	12,30	5,26	0,70
7,0	14,30	5,84	0,90
8,0	16,30	6,52	1,00
9,0	18,80	7,63	1,10
10,0	20,40	8,32	1,20
12,0	23,40	10,45	1,30
15,0	29,40	12,61	1,50
19,0	37,60	15,91	1,75

Parallel Keys High Type

DIN 6885

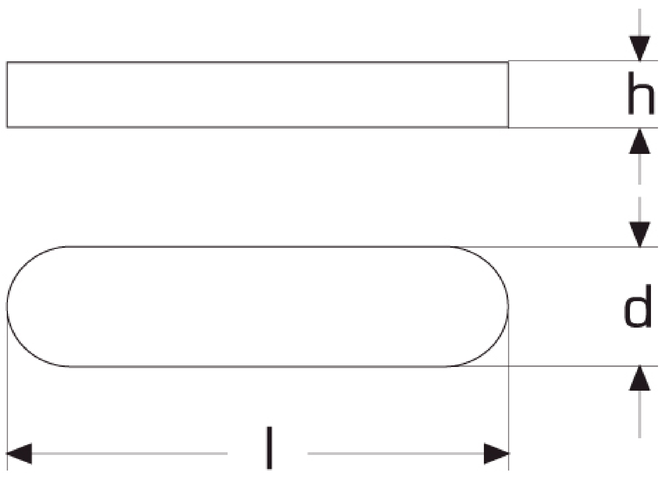

d	4	5	6	8	10	12	14
h	4	5	6	7	8	8	9
l	Range from 10 to 100						

Socket Head Cap Screws, Low Head ,Pilot Recess

DIN 6912

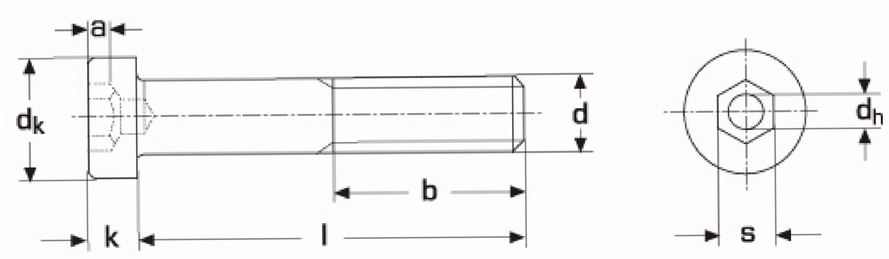

d	M 3	M 4	M 5	M 6	M 8	M 10	M 12	M 14	M 16	M 18	M 20	M 24
dk	5,5	7,0	8,5	10	13	16	18	21	24	27	30	36
k	2	2,8	3,5	4	5	6,5	7,5	8,5	10	11	12	14
dh	1,5	2	2,5	3	4	5	6	7	8	8	10	12
b	12	14	16	18	22	26	30	34	38	42	46	54
a	1,2	1,6	2	2,5	3	3,5	4	4,5	5,5	6	6,5	7
s	2	3	4	5	6	8	10	12	14	14	17	19
l	Range from 4 to 150											

High-Strength Structural washer (HV-HR)

DIN 6916

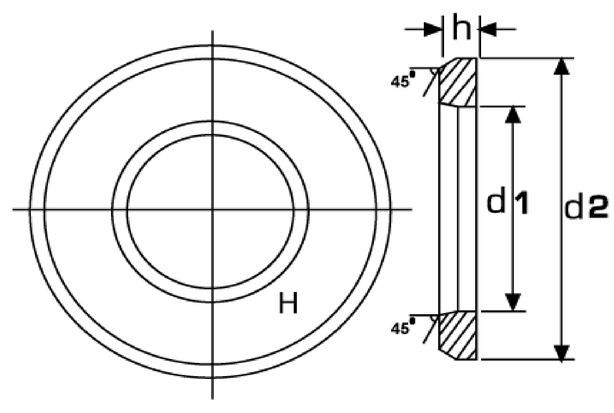

d	M12	M14	M16	M18	M20	M22	M24	M27	M30	M36
d1	13	15	17	19	21	23	25	28	31	37
d2	24	28	30	34	37	39	44	50	56	66
h	3	3	4	4	4	4	4	5	5	6

Hexagon Flange Bolts Metric

DIN 6921 / ISO 4162

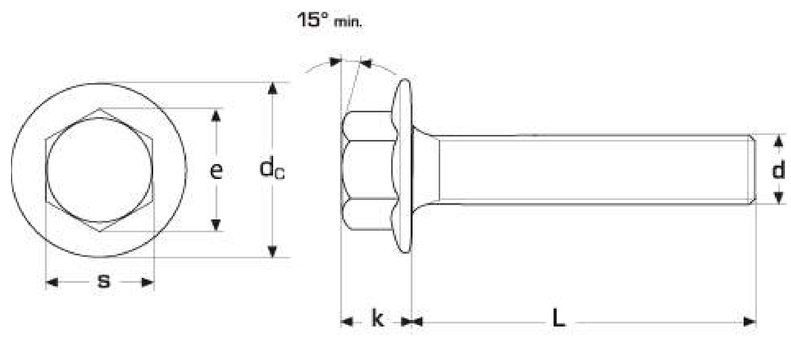

d	M 5	M 6	M 8	M 10	M 12	M 16
k	5,4	6,6	8,1	9,2	11,5	14,4
dc	11,8	14,2	18,0	22,3	26,6	35,0
e	8,71	10,95	14,26	16,50	17,62	23,15
s	8	10	13	15	16	21
l	Range from 8 to 120					

Hexagon Flange Nuts

DIN 6923 / ISO 4161

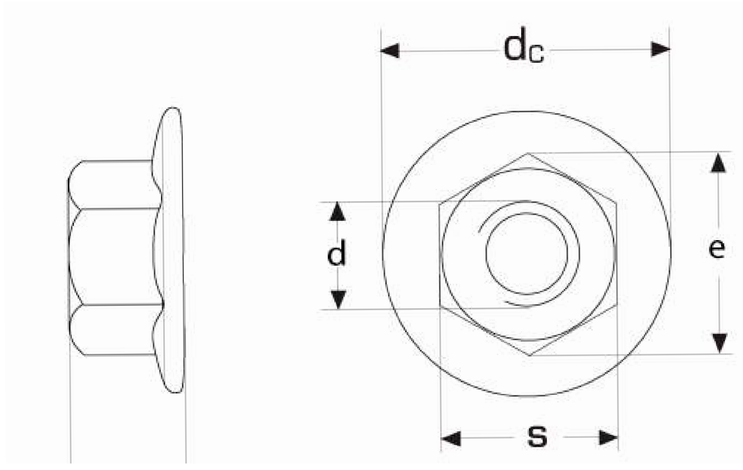

d	4	5	6	8	10	12
k	4,65	5,00	6,00	8,00	10,00	12,00
dc	10,0	11,8	14,2	17,9	21,8	26,0
e	7,66	8,79	11,05	14,38	16,64	20,03
s	7	8	10	13	15	18

Domed Head Blind Rivets

DIN 7337 -A

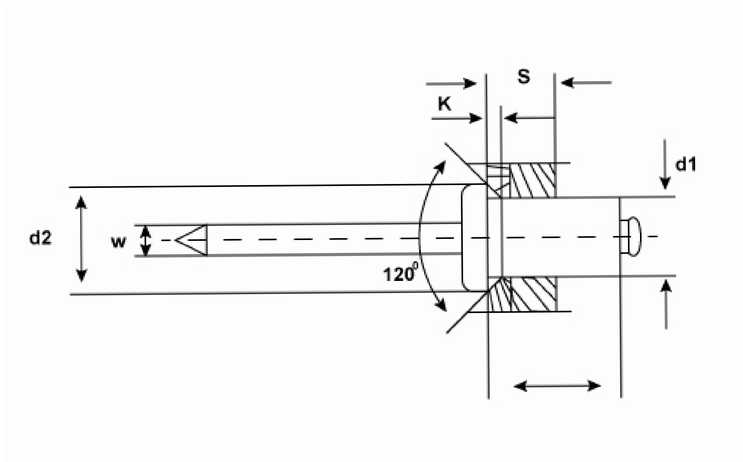

d1	2,4	3,0	3,2	4,0	4,8	5,0	6,0	6,4
d2	5	6,5	6,5	8	9,5	9,5	12	13
k	0,55	0,8	0,8	1	1,1	1,1	1,5	1,8
drill	2,5	3,1	3,3	4,1	4,9	5,1	6,1	6,5
w	1,45	1,8	1,8	2,2	2,75	2,75	3,2	3,6

Countersunk Head Blind Rivets

DIN 7337 -B

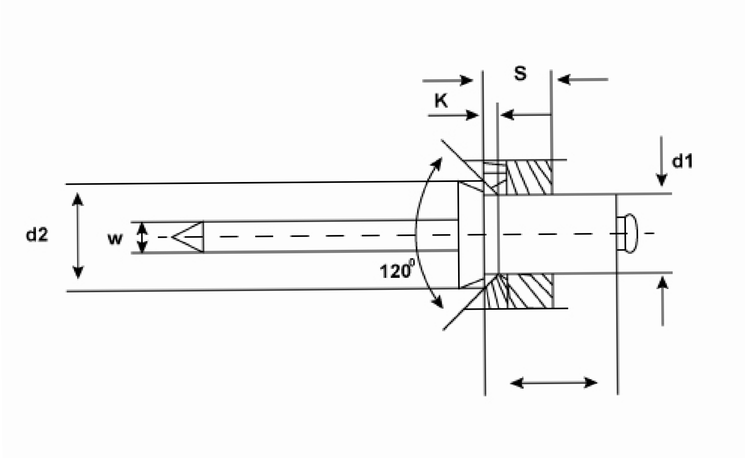

d1	2,4	3,0	3,2	4,0	4,8	5,0	6,0	6,4
d2	5	6,5	6,5	8	9,5	9,5	12	13
k	0,55	0,8	0,8	1	1,1	1,1	1,5	1,8
drill	2,5	3,1	3,3	4,1	4,9	5,1	6,1	6,5
w	1,45	1,8	1,8	2,2	2,75	2,75	3,2	3,6

Washers for Bolts with Heavy Type Spring Pins

DIN 7349

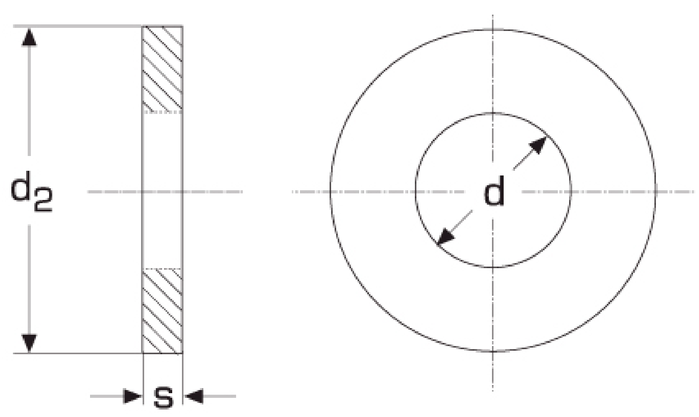

d	3,2	4,3	5,3	6,4	8,4	10,5	13	15	17	19	21	23	25
d2	9	12	15	17	21	25	30	36	40	44	44	50	50
s	1	1,6	2	3	4	4	6	6	6	8	8	8	10

Button Head Screw / Six Lobe Drive

DIN 7380 - 1 / TX

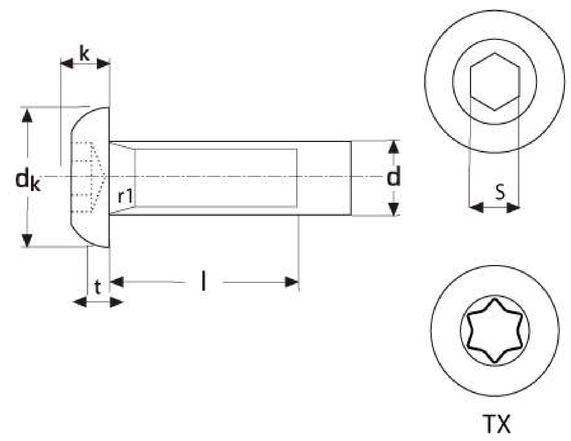

d	M 3	M 4	M 5	M 6	M 8	M 10	M 12
r1	3	4,1	5,2	5,6	7,5	10	11
t	1,4	1,7	2,2	2,4	3,2	3,8	4,7
s	2	2,5	3	4	5	6	8
k	1,65	2,2	2,75	3,3	4,4	5,5	6,6
dk	5,7	7,6	9,5	10,5	14	17,5	21
l	Range from 4 to 80						

Flange Button Head Socket Screws / Six Lobe Drive

DIN 7380 - 2/TX

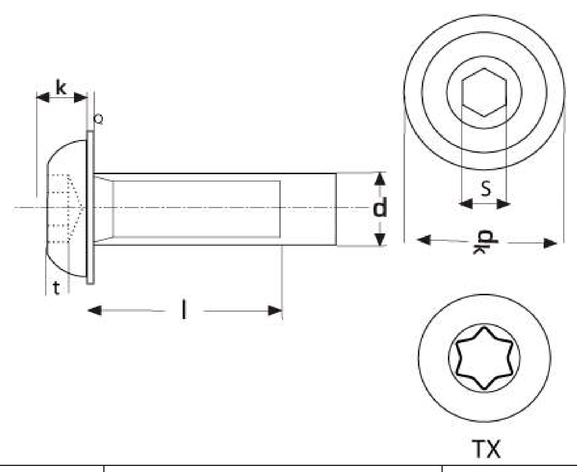

d	3	4	5	6	8	10
d k max	6,9	9,4	11,8	13,6	17,8	21,9
k	1,65	2,2	2,75	3,3	4,4	5,5
s	2	2,5	3	4	5	6
t	1,4	1,7	2,2	2,4	3,2	3,8
Q	0,7	0,8	0,9	1,2	1,5	1,8
l	Range from 4 to 60					

Thread Rolling Raised Cheese Head Screws - z

DIN 7500 C

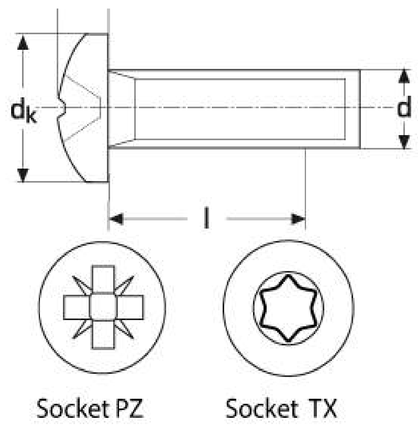

d	M 2,5	M 3	M 4	M 5	M 6
dk	4,70	5,30	7,64	9,14	11,57
k	1,96	2,26	2,92	3,52	4,30
l	Range from 5 to 50				

Thread Rolling Countersunk Head Screws - Z

DIN 7500 M

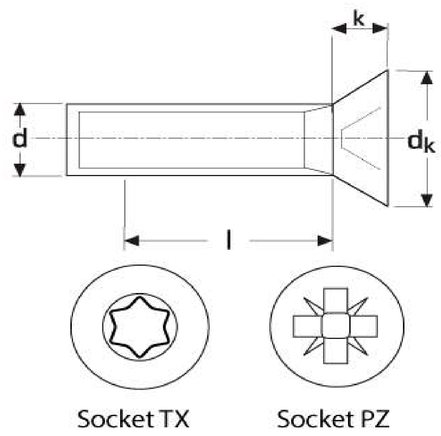

d	M 2,5	M 3	M 4	M 5
dk	4,4	5,2	8	8,9
k	1,50	1,65	2,70	2,70
l	Range from 5 to 50			

Self Drilling Screws with Hexagon Head and Flange

DIN 7504 K

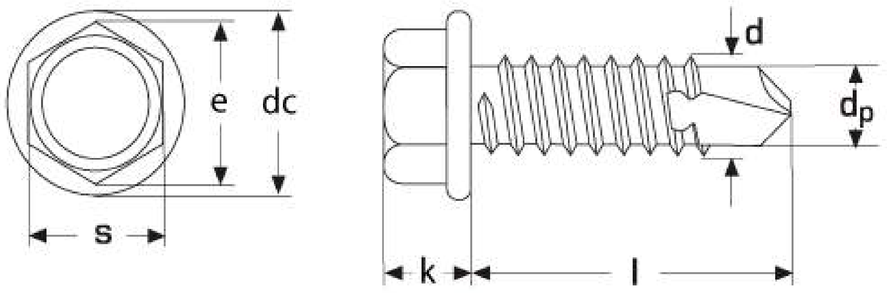

d	3,5	3,9	4,2	4,8	5,5	6,3
k	3,45	3,45	4,25	4,45	5,45	6,45
dp	2,8	3,1	3,6	4,1	4,8	5,8
dc	8,3	8,3	8,8	10,5	11	13,2
e	5,96	5,96	7,59	8,71	8,71	10,95
s	5,5	5,5	7	8	8	10
l	Range from 9,5 to 150					

Self Drilling Screws wih Hexagon Head and Flange with Assembled Sealing washers 16mm

DIN 7504 KO

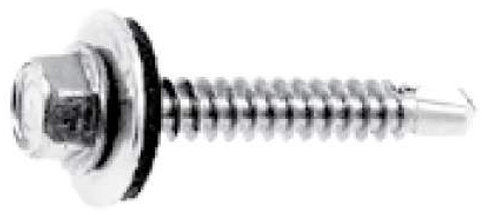

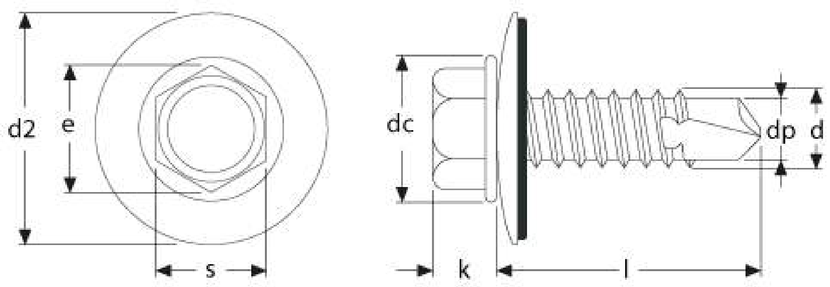

d	5,5
e	8,71
dc	11
d2	16
k	5,45
dp	4,8
s	8
l	Range from 19 to 70

Self Drilling Screws with Pan Head

DIN 7504 M / TX

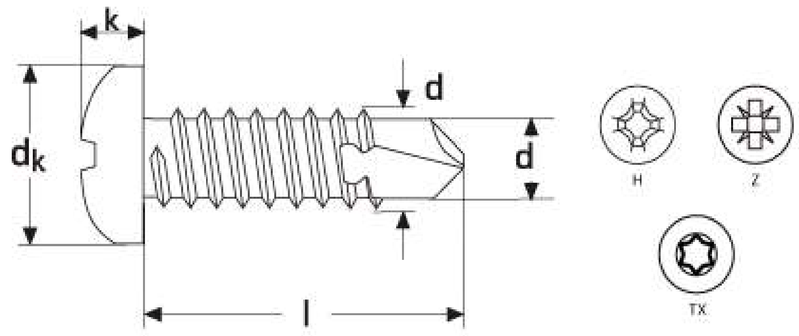

d	2,9	3,5	3,9	4,2	4,8	5,5
dk	5,6	6,9	7,5	8,2	9,5	10,8
k	2,20	2,60	2,80	3,05	3,55	3,95
dp	2,3	2,8	3,1	3,6	4,1	4,8
l	Range from 9,5 to 70					

Self Drilling Screws with Countersunk Head

DIN 7504 O / TX

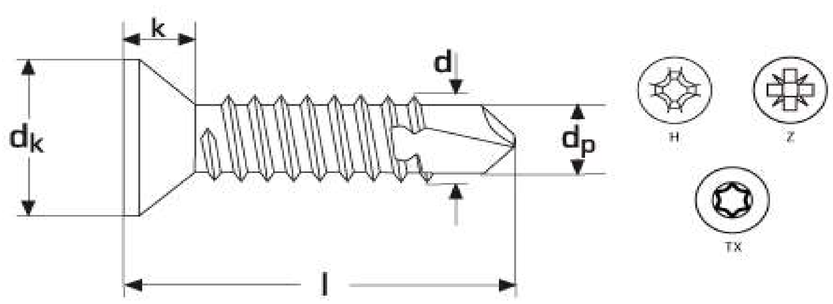

d	3,5	3,9	4,2	4,8	5,5
dk	7,3	7,5	8,4	9,3	10,3
k	2,1	2,3	2,5	3,0	3,4
dp	2,8	3,1	3,6	4,1	4,8
l	Range from 13 to 100				

Self Locking Counter Nuts (Pal Nuts)

DIN 7967

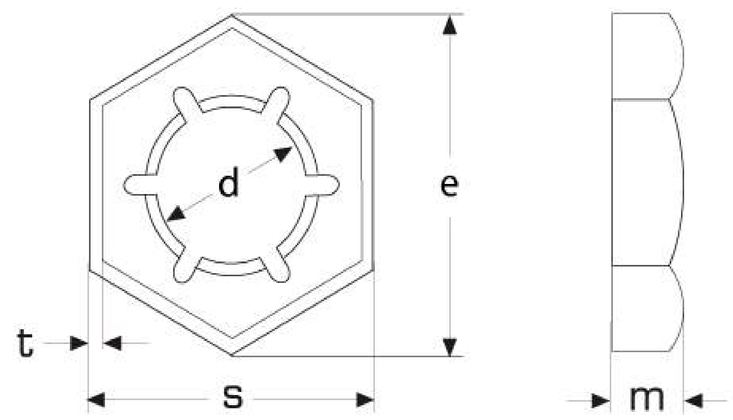

d	4	5	6	8	10	12	16	20	24
m	2,5	2,5	3	3,5	4	4,5	5	6	7
e	8,1	9,2	11,5	15	19,6	21,9	27,7	34,6	41,6
t	0,3	0,4	0,4	0,5	0,5	0,6	0,7	0,8	0,9
s	7	8	10	13	17	19	24	30	36

Slotted Pan Head Tapping Screws

DIN 7971 / ISO 1481

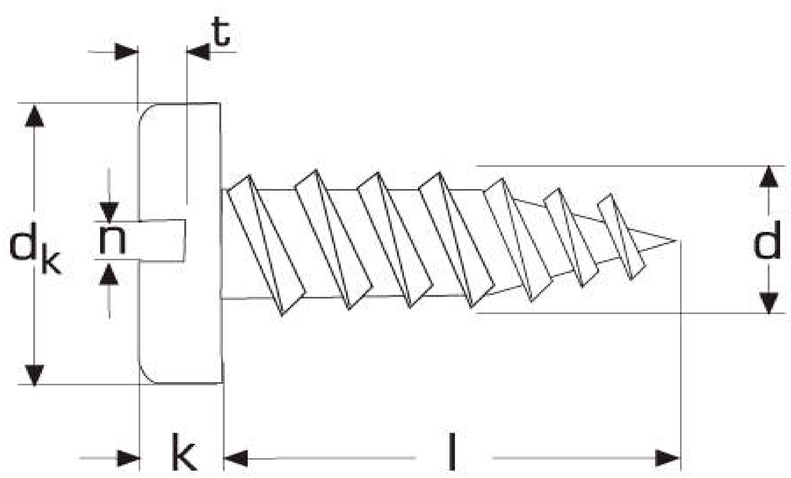

d	2,2	2,9	3,5	3,9	4,2	4,8	5,5	6,3
dk	4,2	5,6	6,9	7,5	8,2	8,5	10,8	12,5
k	1,35	1,75	2,10	2,25	2,45	2,80	3,20	3,65
n	0,6	0,8	1	1	1,2	1,2	1,6	1,6
t	0,55	0,75	0,95	1,05	1,15	1,35	1,55	1,80
l	Rangee from 4,5 to 100							

Slotted Countersunk Head Tapping Screws

DIN 7972 / ISO 1482

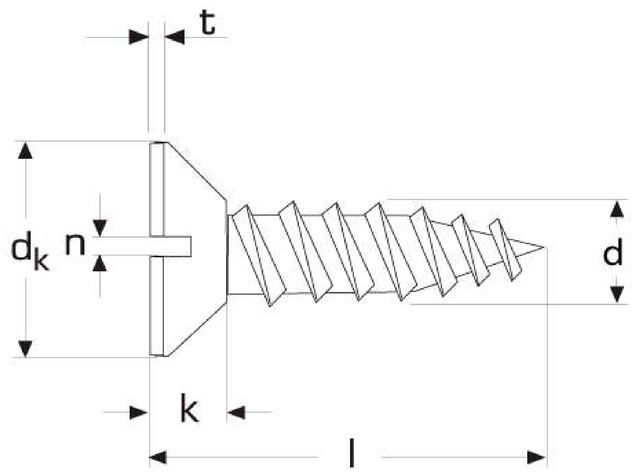

d	2,2	2,9	3,5	3,9	4,2	4,8	5,5	6,3
dk	4,3	5,5	6,8	7,5	8,1	9,5	10,8	12,4
k	1,3	1,7	2,1	2,3	2,5	3,0	3,4	3,8
n	0,6	0,8	1	1	1,2	1,2	1,6	1,6
t	0,40	0,50	0,60	0,70	0,75	0,85	1	1,20
l	Range from 6,5 to 100							

Slotted Raised Countersunk Head Tapping Screws

DIN 7973 / ISO 1483

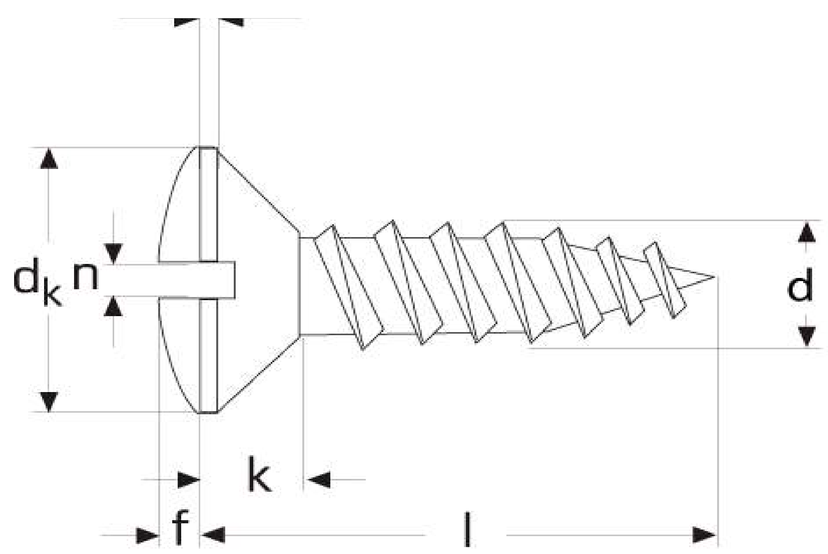

d	2,2	2,9	3,5	3,9	4,2	4,8	5,5	6,3
dk	4,3	5,5	6,8	7,5	8,1	9,5	10,8	12,4
k	1,3	1,7	2,1	2,3	2,5	3,0	3,4	3,8
n	0,6	0,8	1,0	1,0	1,2	1,2	1,6	1,6
t	0,95	1,25	1,55	1,70	1,85	2,15	2,45	2,85
f	0,7	0,9	1,2	1,3	1,4	1,5	1,7	2,0
l	Range from 6,5 to 70							

Hexagon Head Tapping Screws

DIN 7976 / ISO 1479

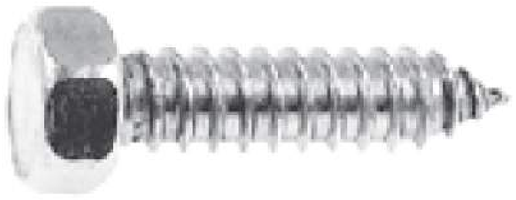

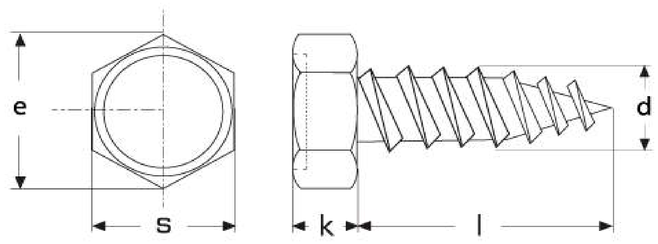

d	2,2	2,9	3,5	3,9	4,2	4,8	5,5	6,3	8
k	1,3	1,5	2,3	2,3	2,8	3	4	4,8	5,8
e	3,38	5,40	5,96	7,59	7,59	8,71	8,71	10,95	14,21
s	3,2	5	5,5	7	7	8	8	10	13
l	Range from 9,5 to 150								

Spring Lock Washers for Screws with Cylindrical Heads

DIN 7980

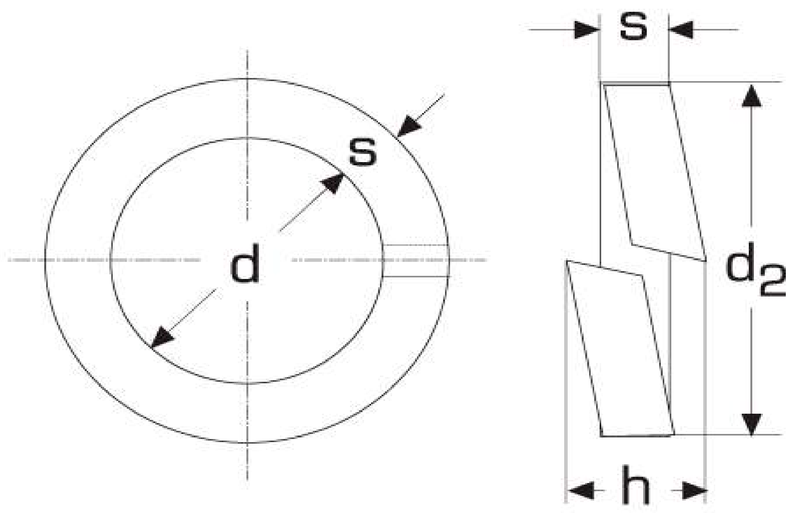

for thread	d	d2	h	s
M 3	3,1	5,6	2	1
M 3,5	3,6	6,1	2	1
M 4	4,1	7	2,4	1,2
M 5	5,1	8,8	3,2	1,6
M 6	6,1	9,9	3,2	1,6
M 8	8,1	12,7	4	2
M 10	10,2	16	5	2,5
M 12	12,2	18	5	2,5
M 14	14,2	21,1	6	3
M 16	16,2	24,4	7	3,5
M 18	18,2	26,4	7	3,5
M 20	20,2	30,6	9	4,5
M 24	24,5	35,9	10	5
M 27	27,5	38,9	10	5
M 30	30,5	44,1	12	6

Cross Recessed Pan Head Tapping Screws -H

DIN 7981 C-H / ISO 7049

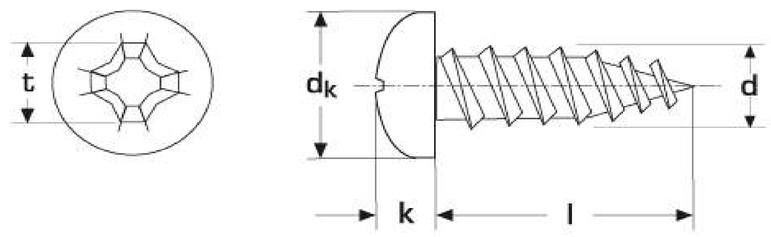

d	2,2	2,9	3,5	3,9	4,2	4,8	5,5	6,3
dk	4,3	5,5	6,8	7,5	8,1	9,5	10,8	12,4
k	1,80	2,20	2,60	2,80	3,05	3,55	3,95	4,55
t	2,6	3	4,2	4,4	4,6	5	6,5	7,1
nest	PH1	PH1	PH2	PH2	PH2	PH2	PH3	PH3
l	Range from 4,5 to 120							

Cross Recessed Pan Head Tapping Screws -Z

DIN 7981 C-Z / ISO 7049

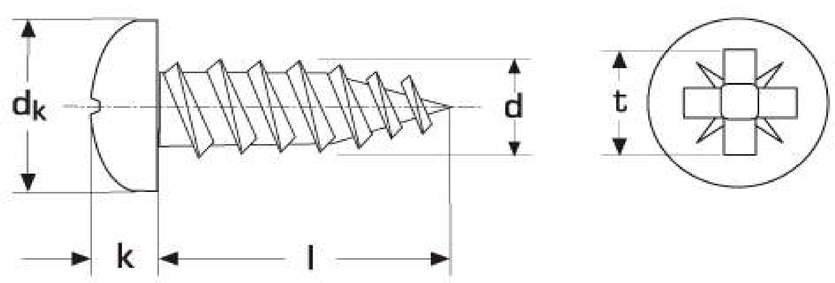

d	2,2	2,9	3,5	3,9	4,2	4,8	5,5	6,3
dk	4,3	5,5	6,8	7,5	8,1	9,5	10,8	12,4
k	1,80	2,20	2,60	2,80	3,05	3,55	3,95	4,55
t	2,4	2,9	3,9	4,1	4,3	4,7	6,2	6,7
nest	PZ1	PZ1	PZ2	PZ2	PZ2	PZ2	PZ3	PZ3
l	Range from 6,5 to 100							

Pan Head Tapping Screws, Six Lobe Drive

DIN 7981 TX / ISO 7049

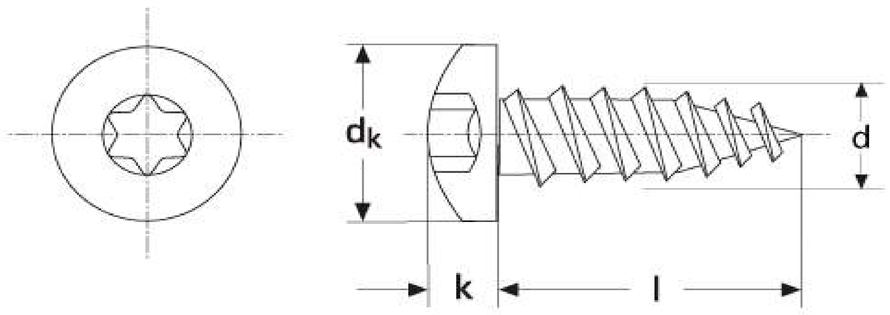

d	2,2	2,9	3,5	3,9	4,2	4,8	5,5	6,3
dk	4,3	5,5	6,8	7,5	8,1	9,5	10,8	12,4
k	1,80	2,20	2,60	2,80	3,05	3,55	3,95	4,55
nest	TX6	TX8	TX10	TX15	TX20	TX25	TX25	TX30
l	Range from 6,5 to 80							

Cross Recessed Countersunk Head Tapping Screws - H

DIN 7982 C-H / ISO 7050

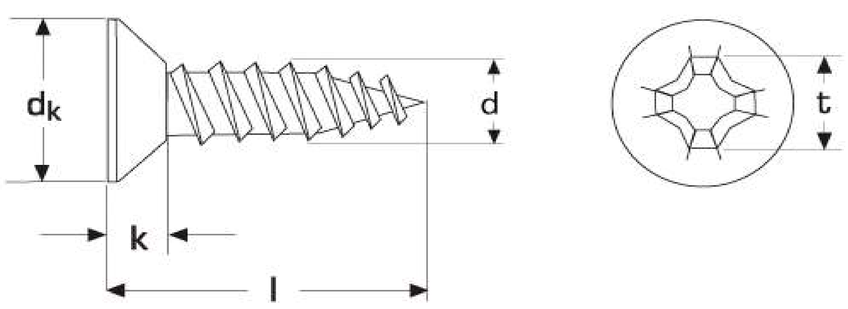

d	2,2	2,9	3,5	3,9	4,2	4,8	5,5	6,3
dk	4,3	5,5	6,8	7,5	8,1	9,5	10,8	12,4
k	1,3	1,7	2,1	2,3	2,5	3	3,4	3,8
t	2,5	3	4,2	4,6	4,7	5,1	6,8	7,1
nest	PH1	PH1	PH2	PH2	PH2	PH2	PH3	PH3
l	Range from 6,5 to 120							

Cross Recessed Countersunk Head Tapping Screws - Z

DIN 7982 C-Z / ISO 7050

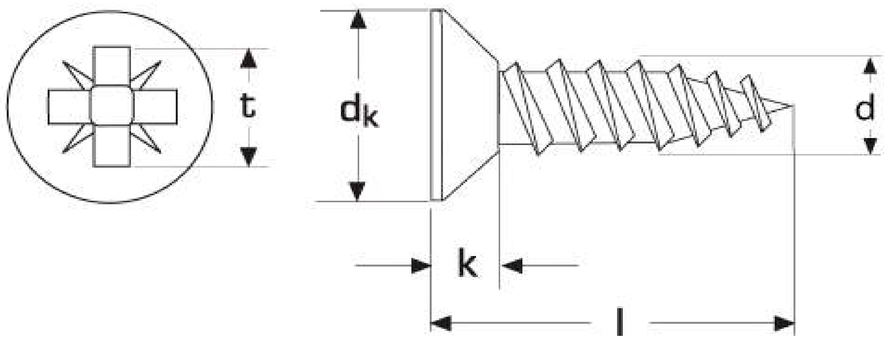

d	2,2	2,9	3,5	3,9	4,2	4,8	5,5	6,3
dk	4,3	5,5	6,8	7,5	8,1	9,5	10,8	12,4
k	1,3	1,7	2,1	2,3	2,5	3	3,4	3,8
t	2,4	2,8	4,0	4,2	4,4	5,0	6,3	7,0
nest	PZ1	PZ1	PZ2	PZ2	PZ2	PZ2	PZ3	PZ3
l	Range from 6,5 to 120							

Countersunk Head Tapping Screws, Six Lobe Drive

DIN 7982 TX / ISO 7050

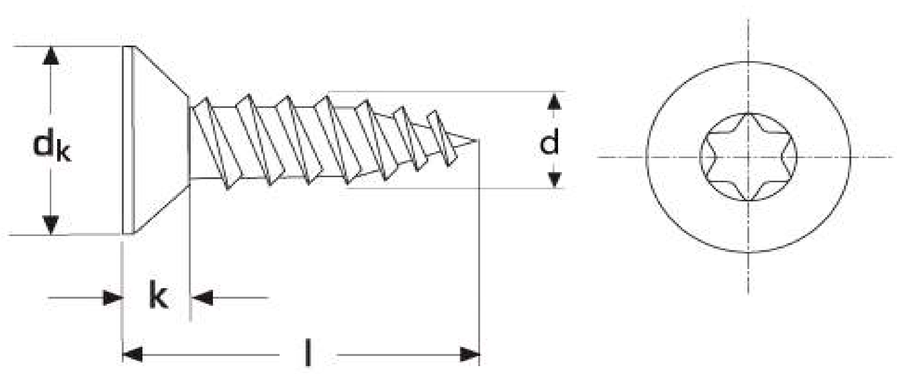

d	2,2	2,9	3,5	3,9	4,2	4,8	5,5	6,3
dk	4,3	5,5	6,8	7,5	8,1	9,5	10,8	12,4
k	1,3	1,7	2,1	2,3	2,5	3	3,4	3,8
nest	TX6	TX8	TX10	TX15	TX20	TX25	TX25	TX30
l	Range from 6,5 to 80							

Cross Recessed Raised Countersunk Head Tapping Screws - H

DIN 7983 C-H / ISO 7051

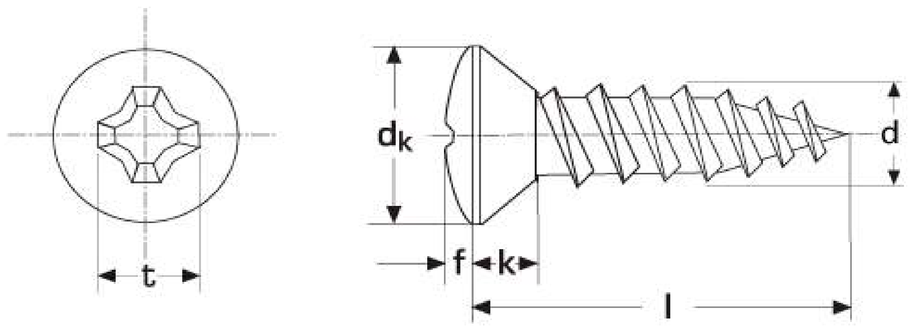

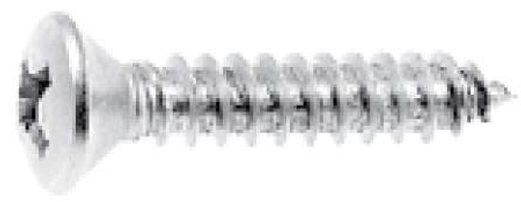

d	2,2	2,9	3,5	3,9	4,2	4,8	5,5	6,3
dk	4,3	5,5	6,8	7,5	8,1	9,5	10,8	12,4
k	1,3	1,7	2,1	2,3	2,5	3	3,4	3,8
t	2,8	3,4	4,6	4,7	4,9	5,4	7	7,4
f	0,7	0,9	1,2	1,3	1,4	1,5	1,7	2
nest	PH1	PH1	PH2	PH2	PH2	PH2	PH3	PH3
l	Range from 6,5 to 120							

Cross Recessed Raised Countersunk Head Tapping Screws - Z

DIN 7983 C- Z / ISO 7051

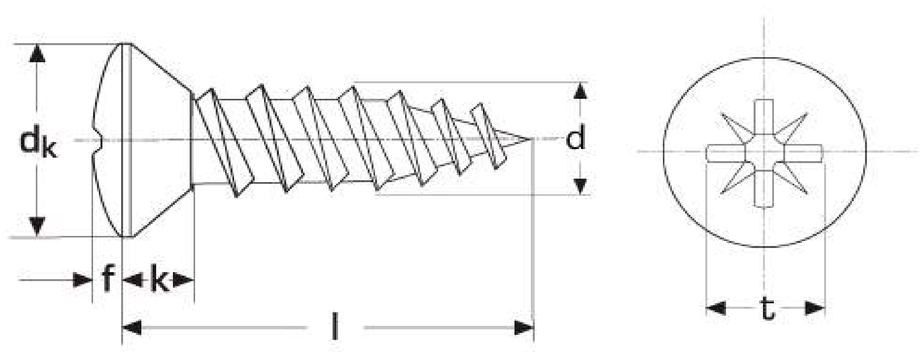

d	2,2	2,9	3,5	3,9	4,2	4,8	5,5	6,3
dk	4,3	5,5	6,8	7,5	8,1	9,5	10,8	12,4
k	1,3	1,7	2,1	2,3	2,5	3	3,4	3,8
t	2,4	3,1	4,3	4,4	4,6	5,1	6,6	7,1
f	0,7	0,9	1,2	1,3	1,4	1,5	1,7	2
nest	PZ1	PZ1	PZ2	PZ2	PZ2	PZ2	PZ3	PZ3
l	Range from 6,5 to 100							

Raised Countersunk Head Tapping Screws Six Lobe Drive

DIN 7983 TX / ISO 7051

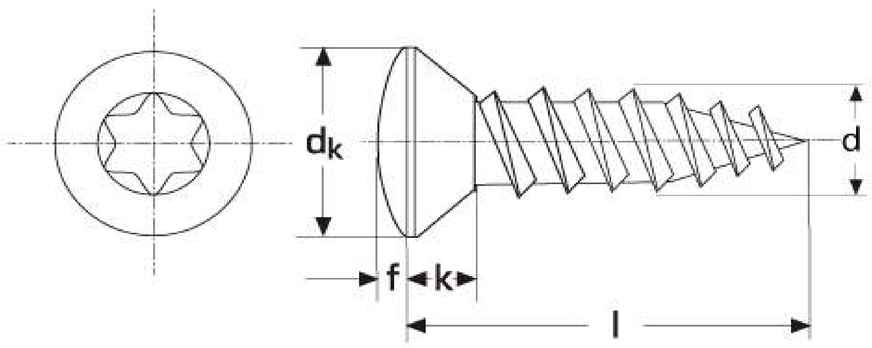

d	2,2	2,9	3,5	3,9	4,2	4,8	5,5	6,3
dk	4,3	5,5	6,8	7,5	8,1	9,5	10,8	12,4
k	1,3	1,7	2,1	2,3	2,5	3	3,4	3,8
f	0,7	0,9	1,2	1,3	1,4	1,5	1,7	2
nest	TX6	TX8	TX10	TX15	TX20	TX25	TX25	TX30
l	Range from 6,5 to 80							

Hexagon Socket Head Cap Screws with Low Head

DIN 7984

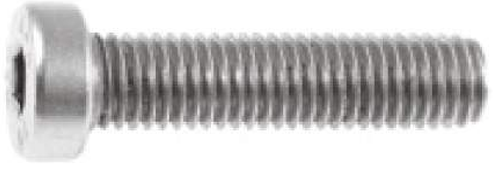

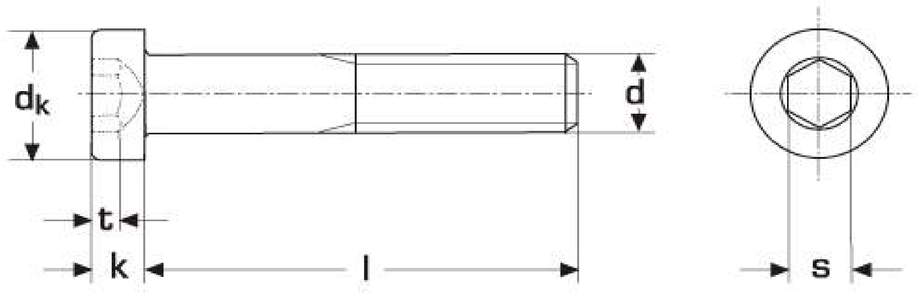

d	M 3	M 4	M 5	M 6	M 8	M 10	M 12	M 16	M 20	M 24
dk	5,5	7	8,5	10	13	16	18	24	30	36
k	2	2,8	3,5	4	5	6	7	9	11	13
t	1,5	2,3	2,7	3	3,8	4,5	5	5,5	7,5	
s	2	2,5	3	4	5	7	8	12	14	19
l	Range from 3 to 150									

Cross Recessed Raised Cheese Head Screws - H

DIN 7985 H / ISO 7045

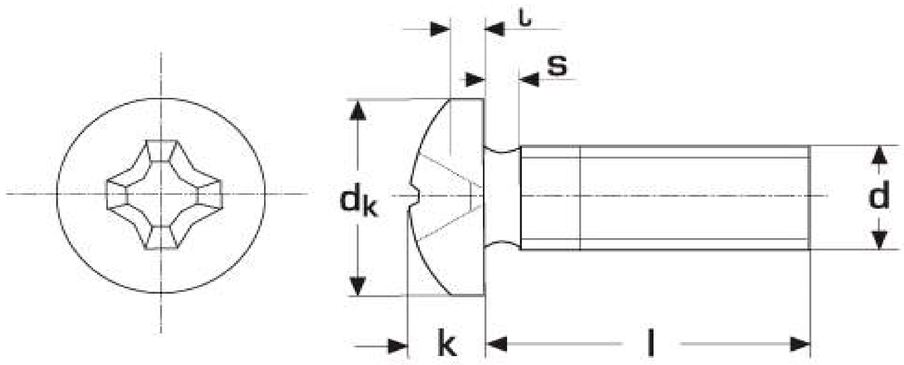

d	M 1,6	M 2	M 2,5	M 3	M 4	M 5	M 6	M 8
dk	3,2	4	5	6	8	10	12	16
k	1,3	1,6	2	2,4	3,1	3,8	4,6	6
t	0,8	1,1	1,3	1,6	2	2,5	3	3,7
s	0,7	0,8	0,9	1	1,4	1,6	2	2,5
nest	PH0	PH1	PH1	PH1	PH2	PH2	PH3	PH4
l	Range from 2 to 150							

Cross Recessed Raised Cheese Head Screws - Z

DIN 7985 Z / ISO 7045

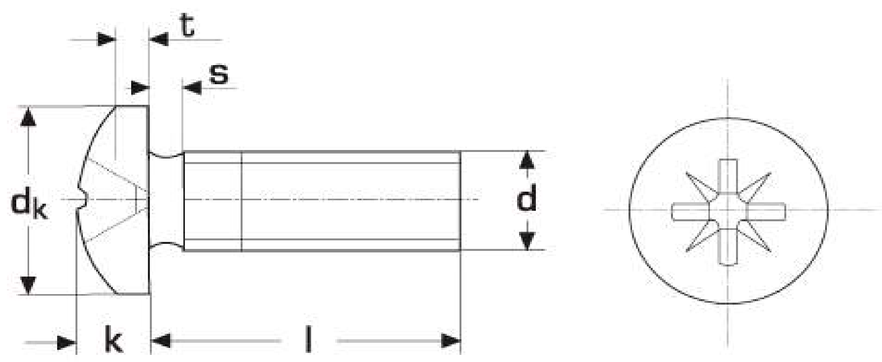

d	M 1,6	M 2	M 2,5	M 3	M 4	M 5	M 6	M 8
dk	3,2	4	5	6	8	10	12	16
k	1,3	1,6	2	2,4	3,1	3,8	4,6	6
t	0,8	1,1	1,3	1,6	2	2,5	3	3,7
s	0,7	0,8	0,9	1	1,4	1,6	2	2,5
nest	PZ0	PZ1	PZ1	PZ1	PZ2	PZ2	PZ3	PZ4
l	Range from 2 to 150							

Pan Head Screws, Six Lobe Drive

DIN 7985 TX / ISO 7045

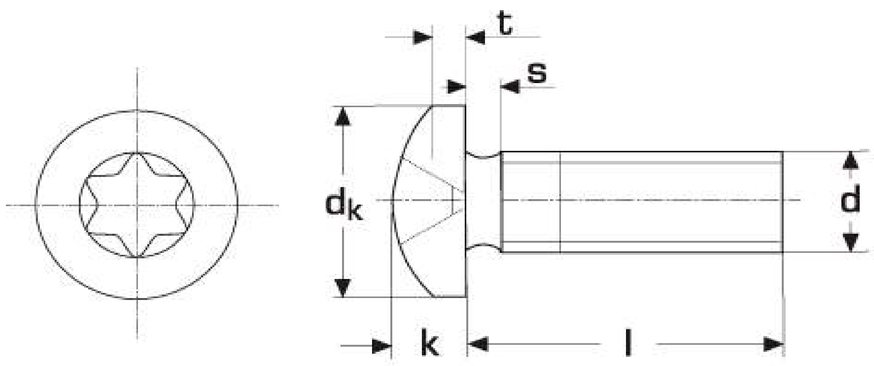

d	M 1,6	M 2	M 2,5	M 3	M 4	M 5	M 6	M 8
dk	3,2	4	5	6	8	10	12	16
k	1,3	1,6	2	2,4	3,1	3,8	4,6	6
t	0,8	1,1	1,3	1,6	2	2,5	3	3,7
s	0,7	0,8	0,9	1	1,4	1,6	2	2,5
nest	TX5	TX6	TX8	TX10	TX20	TX25	TX30	TX40
l	Range from 2 to 150							

Washers for Steel Constructions

DIN 7989

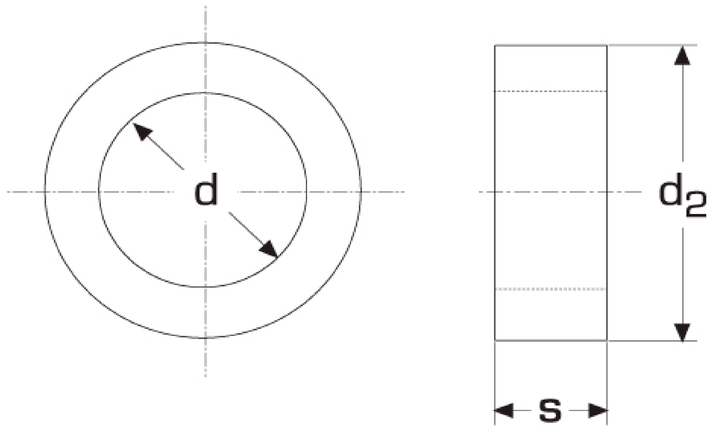

for thread	M 10	M 12	M 16	M 20	M 22	M 24	M 27	M 30	M 33	M 36
d	11	14	18	22	24	26	30	33	36	39
d2	21	24	30	37	39	44	50	56	60	66
s	8	8	8	8	8	8	8	8	8	8

Hexagon Head bolts with Hexagon nuts

DIN 7990

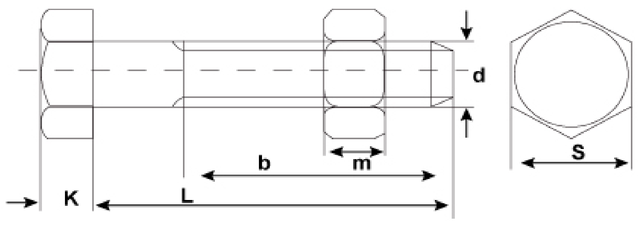

d	M12	M16	M20	M22	M24	M27	M30
P	1,75	2	2,5	2,5	3	3	3,5
b	19,5	23	26	58	29,5	32,5	35
k	8	10	13	14	15	17	19
m	10	13	16	18	19	22	24
s	19	24	30	32	36	41	46

Hexagon Socked Counersunk Head Screws

DIN 7991

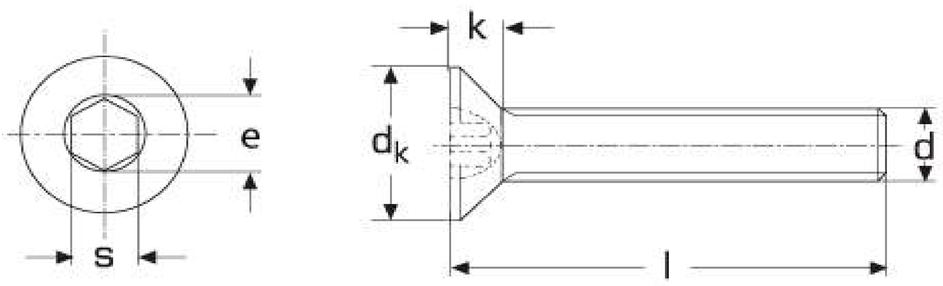

d	M 3	M 4	M 5	M 6	M 8	M 10	M 12	M 16	M 20	M 24
dk	6	8	10	12	16	20	24	30	36	39
k	1,7	2,3	2,8	3,3	4,4	5,5	6,5	7,5	8,5	14
e	2,30	2,87	3,44	4,58	5,72	6,86	9,15	11,43	13,72	16
s	2	2,5	3	4	5	6	8	10	12	14
l	Range from 4 to 190									

Countersunk Head Screws, Six Lobe Drive

DIN 7991 TX

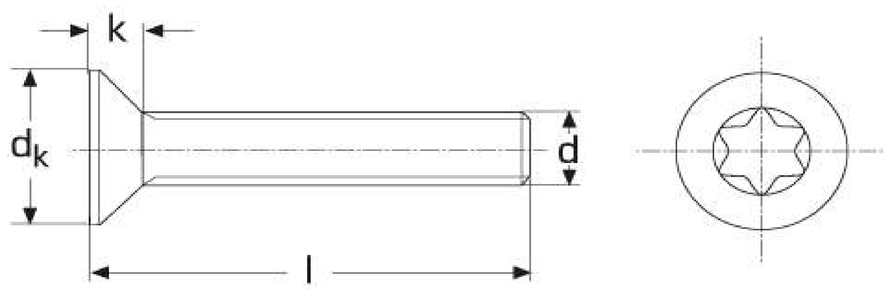

d	M 4	M 5	M 6
dk	8	10	12
k	2,3	2,8	3,3
nest	TX20	TX25	TX30
l	Range from 10 to 30		

Cross Recessed Raised Countersunk Head Wood Screws - Z

DIN 7995

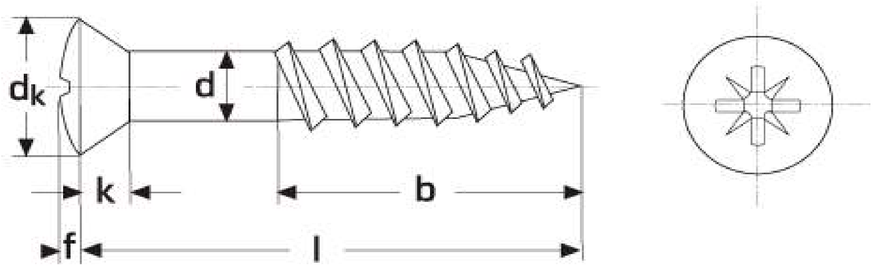

b ≥ 0,6 l

d	3	3,5	4	4,5	5	6
dk	5,6	6,5	7,5	8,3	9,2	11
k	1,65	1,93	2,20	2,35	2,50	3
f	0,75	0,90	1	1,10	1,25	1,50
nest	PZ1	PZ2	PZ2	PZ2	PZ2	PZ3
l	Range from 12 to 150					

Cross Recessed Round Head Wood Screws - Z

DIN 7996

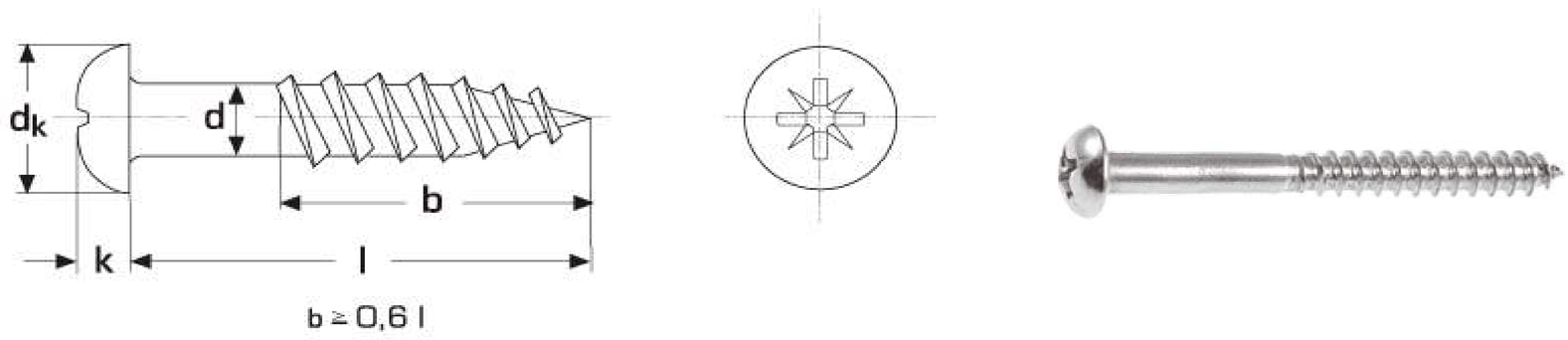

d	3	3,5	4	4,5	5	6
dk	6	7	8	9	10	12
k	2,10	2,35	2,80	3,10	3,50	4,20
nest	PZ1	PZ2	PZ2	PZ2	PZ2	PZ3
l	Range from 12 to 120					

Cross Recessed Raised Countersunk Head Wood Screws - Z

DIN 7997

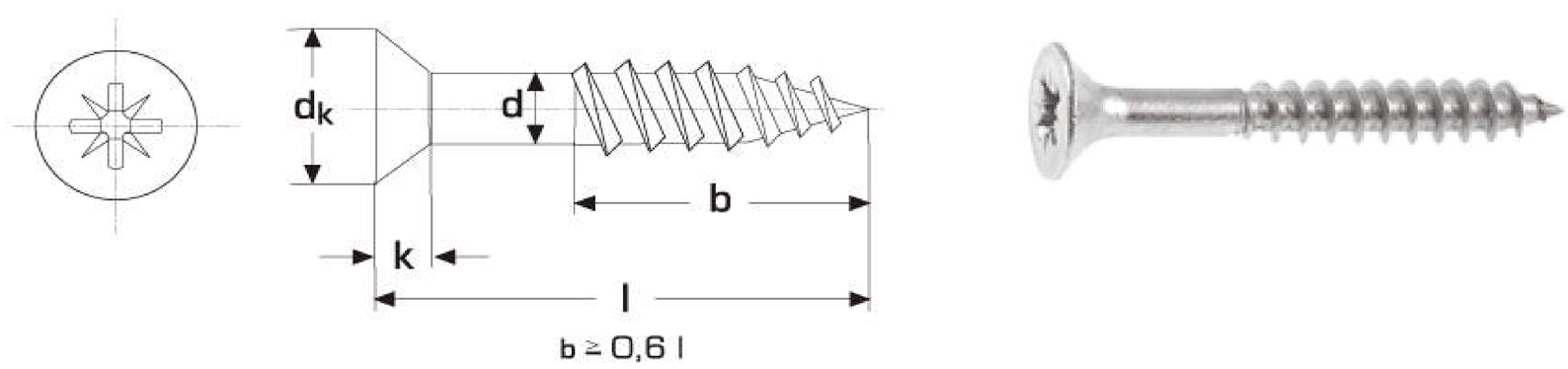

d	3,0	3,5	4,0	4,5	5,0	6,0
dk	5,6	6,5	7,5	8,3	9,2	11,0
k	1,65	1,93	2,20	2,35	2,50	3,00
nest	PZ1	PZ2	PZ2	PZ2	PZ2	PZ3
l	Range from 12 to 120					

SRISHAA
MACHINED FASTENERS PVT.LTD.

Slotted Springs Pins, Heavy Duty

ISO 8752

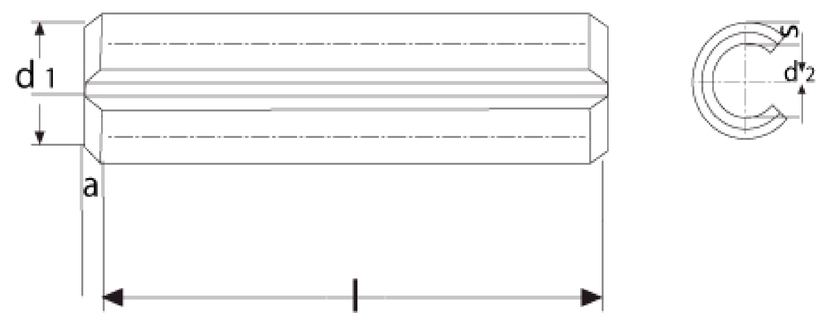

d	a	s	d2	d1 min	l
1	0,15	0,2	0,8	1,2	Range from 4 to 100
1,5	0,25	0,3	1,1	1,7	
2	0,4	0,4	1,5	2,3	
2,5	0,4	0,5	1,8	2,8	
3	0,5	0,6	2,1	3,3	
3,5	0,6	0,75	2,3	3,8	
4	0,65	0,8	2,8	4,4	
4,5	0,8	1	2,9	4,4	
5	0,9	1	3,4	5,4	
6	1,2	1,25	3,9	6,4	
8	2	1,5	5,5	8,5	
10	2	2	6,5	10,5	

Washers with Outside Diameter ~3 x Nominal Thread Diameter

DIN 9021 / ISO 7093

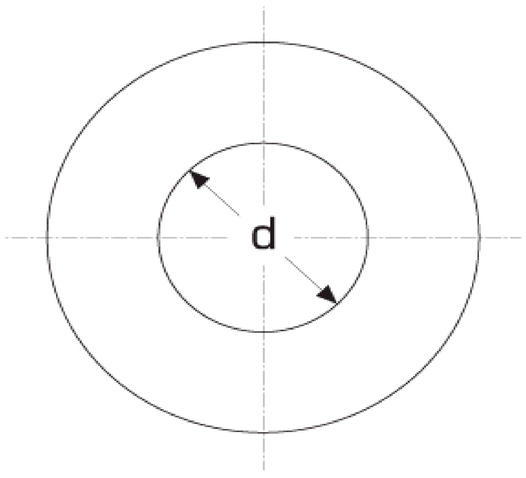

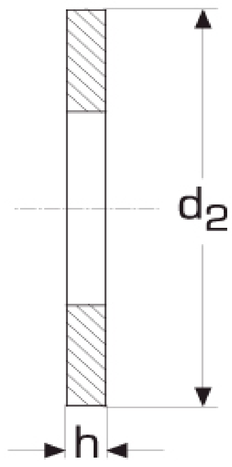

for thread	d	d2	h
M 2	2,2	6	0,8
M 2,5	2,7	8	0,8
M 3	3,2	9	0,8
M 3,5	3,7	11	0,8
M 4	4,3	12	1
M 5	5,3	15	1,2
M 6	6,4	18	1,8
M 7	7,4	22	2
M 8	8,4	24	2
M 10	10,5	30	2,5
M 12	13	37	3
M 14	15	44	3
M 16	17	50	3
M 18	20	56	4
M 20	22	60	4
M 24	26	72	5
M 30	33	92	6
M 36	39	110	8

Cotter Pins , Type "β"

DIN 11024

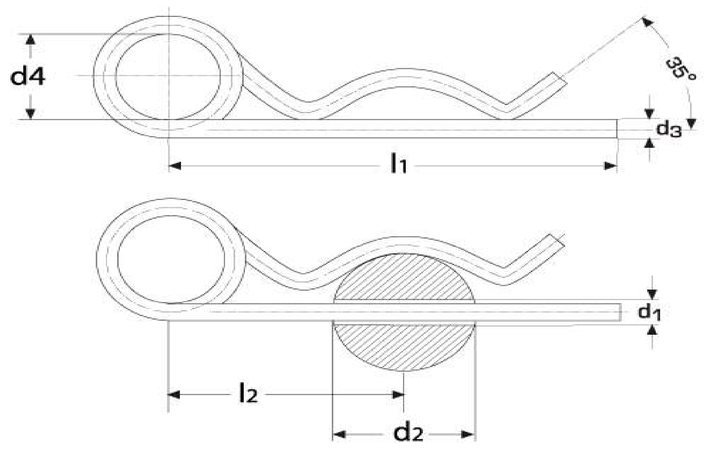

d1	2,5	3,2	4	5	6,3	7	8
d2	9 - 11	>11 - 14	>14 - 20	>20 - 26	>26 - 34	>34 - 45	>45 - 56
d3	2,25	2,80	3,60	4,50	5,60	6,30	7
d4	20	20	20	25	25	30	30
l1	42	48	64	80	97	125	150
l2	24	26	32	39	45	56	63

Welding Bolts

DIN 32501/3
ISO 13918

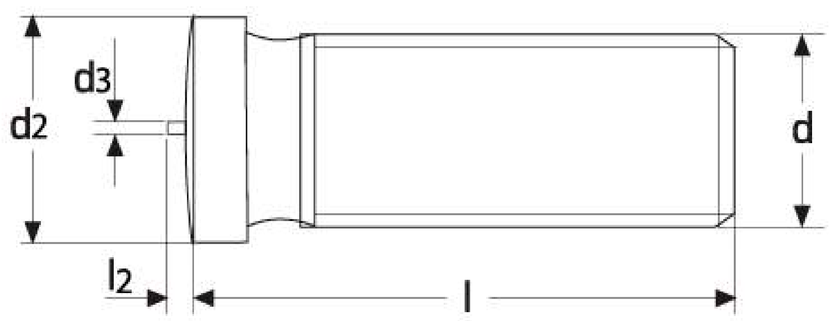

d	M 3	M 4	M 5	M 6	M 8
d2	4,5	5,5	6,5	7,5	9
d3	0,60	0,65	0,75	0,75	0,75
l2	0,55	0,55	0,80	0,80	0,85
l	Range from 8 to 60				

SRISHAA
MACHINED FASTENERS PVT.LTD.

Break / Shear Nuts

S M F 01

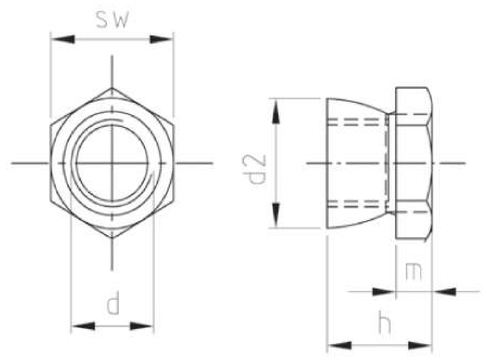

d	6	8	10	12	16	20
h	9,5	12	15	16	20,5	25
m	3,5	4	5	5,5	7	4
d2	9,8	12,8	16,8	18,8	23,8	29,8
Pull off Nm	7-13	13-25	30-40	35-45	45-60	65-80
Drive Size	SW10	SW13	SW17	SW19	SW24	SW30

Breaking Bolt

S M F 02

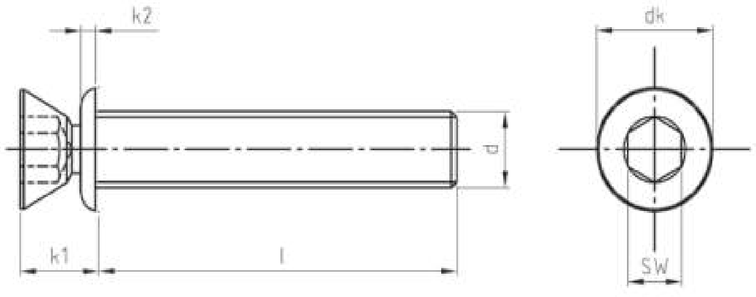

d	8	8	8	8	8	8	8
l	20	25	30	35	40	45	50
k1	8,6	8,6	8,6	8,6	8,6	8,6	8,6
k2	1	1	1	1	1	1	1
dk	13	13	13	13	13	13	13
Pull off Nm	18-25	18-25	18-25	18-25	18-25	18-25	18-25
Drive Size	SW6	SW6	SW6	SW6	SW6	SW6	SW6

Breaking Screw

S M F 03

As Per Customer Requirement.

EPDM Washer

S M F 04

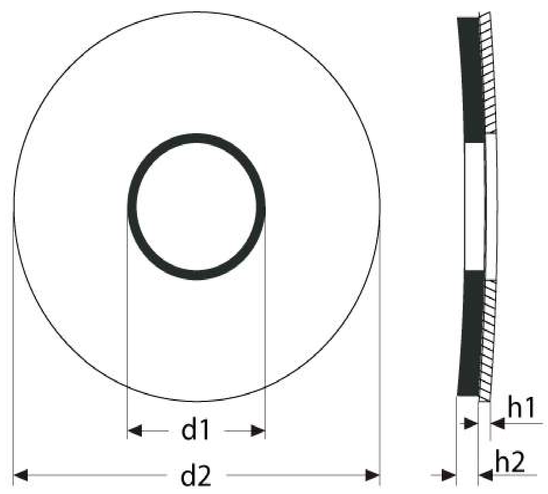

d	d2	h1	h2
4,8	12	0,8	2
4,8	14	0,8	2
5,3	12	0,8	2
5,3	14	0,8	2
5,3	16	0,8	2
5,3	19	0,8	2
6,2	16	0,8	2
6,7	16	0,8	2
6,7	19	0,8	2
6,7	22	0,8	2
6,7	25	0,8	2
6,7	29	0,8	2
8,4	16	0,8	2
8,4	19	0,8	2
8,4	22	0,8	2
8,4	25	0,8	2
8,4	29	0,8	2
10,5	25	0,8	2
10,5	29	0,8	2
13	29	0,8	2

Conical Washer

S M F 05

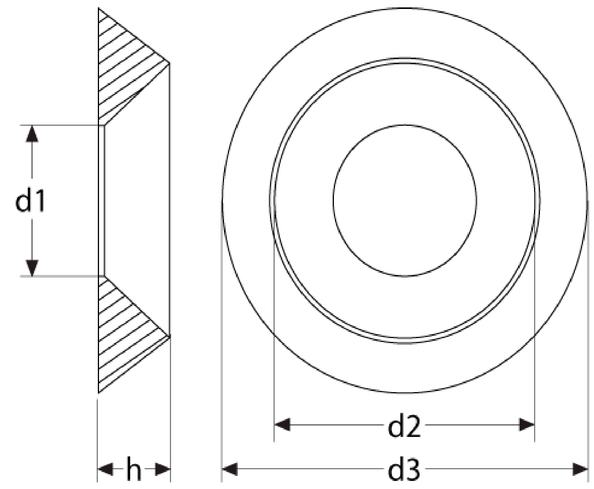

d1	3,5	4,3	5,3	6,4	8,5	11
d2	6,5	8	10	12	16	20
d3	9	11	14	16	22	28
h	2	2,5	3	3,5	4,5	5,5

Hex Socket with Selftaping Threads

S M F 06

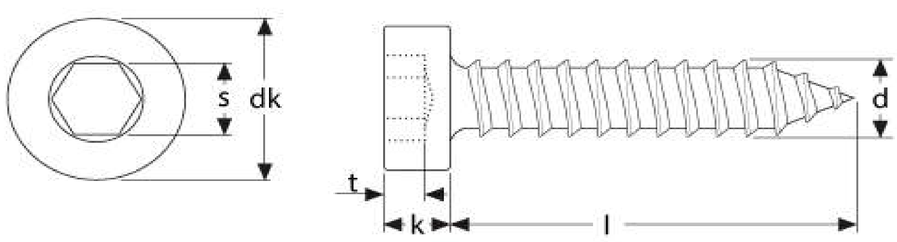

d	4,8	5,5	6,3
dk	8,5	10	10
k	5	6	6
t	2,92	3,40	3,40
s	4	5	5
l	Rane from 9,5 to 100		

Screw with Flange Head and Hex Socket

S M F 07

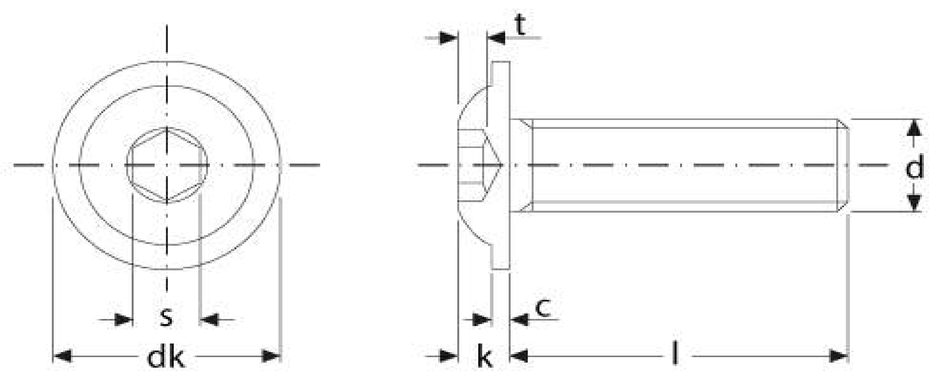

d	M 3	M 4	M 5	M 6	M 8	M 10	M 12
dk	6,9	9,4	11,8	13,6	17,8	21,9	24
k	1,65	2,20	2,75	3,30	4,40	5,50	6,60
t	1,04	1,30	1,58	2,08	2,60	3,12	4,16
c	0,7	0,8	1	1,3	1,7	1,7	2,4
s	2	2,5	3	4	5	6	8
l	Range from 3 to 120						

Wood Screw with a Countersunk Head with PZ Cross Socket

S M F 08

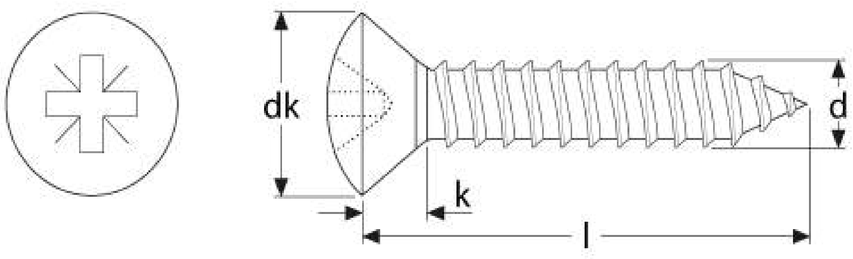

d	3	3,5	4	4,5	5	6
dk	6	7	8	9	10	12
k	1,6	2	2,4	2,5	3	3,5
nest	PZ1	PZ2	PZ2	PZ2	PZ2	PZ3
l	Range from 12 to 100					

Wood Screw with Cone, with PZ Cross Socket Full Threaded

S M F 09

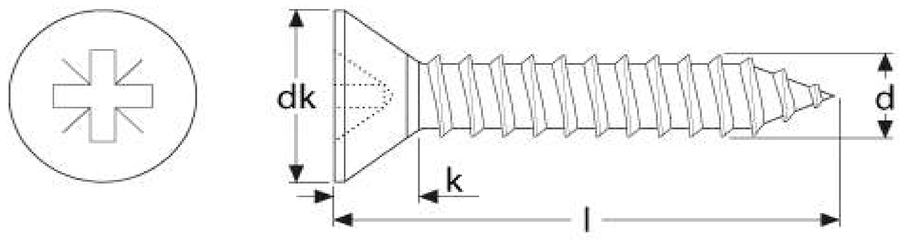

d	3	3,5	4	4,5	5	6
dk	6	7	8	9	10	12
k	1,8	2	2,3	2,5	2,8	3,5
nest	PZ1	PZ2	PZ2	PZ2	PZ2	PZ3
l	Range from 10 to 100					

Wood Screw with a Countersunk Head, with PZ Cross Socket with Partial Thread

S M F 10

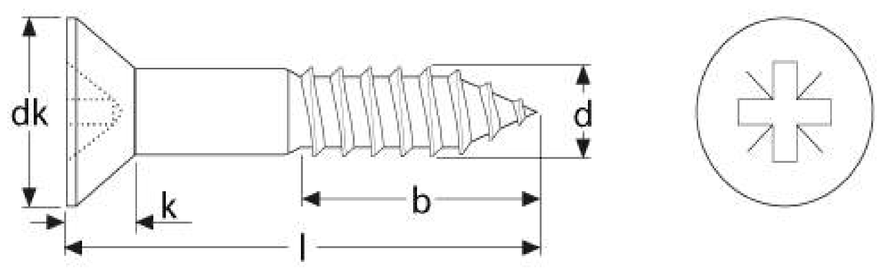

d	3	3,5	4	4,5	5	6
dk	6	7	8	9	10	12
k	1,8	2	2,3	2,5	2,8	3,3
nest	PZ1	PZ2	PZ2	PZ2	PZ2	PZ3
l	Range from 25 to 100					

Bolt with a Large Mushroom Head, Slotted

S M F 11

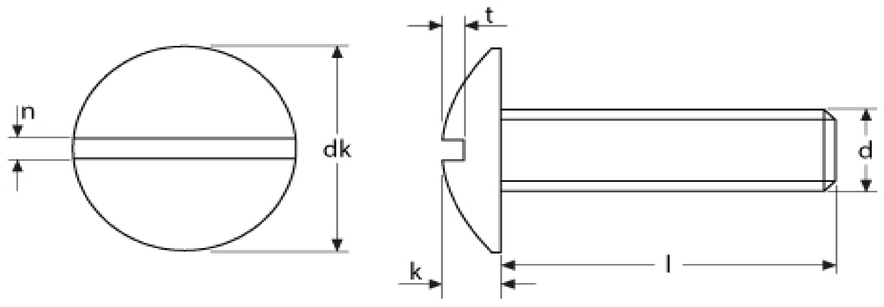

d	M 3	M 4	M 5	M 6	M 8
dk	7	10	12,5	15	4,4
k	2	2,2	2,7	3,3	4,4
n	0,8	1	1,2	1,6	2
t	0,95	0,96	1,20	1,44	1,92
l	Range from 5 to 120				

Wood Screw with Rounded Head, with PZ Cross Socket

S M F 12

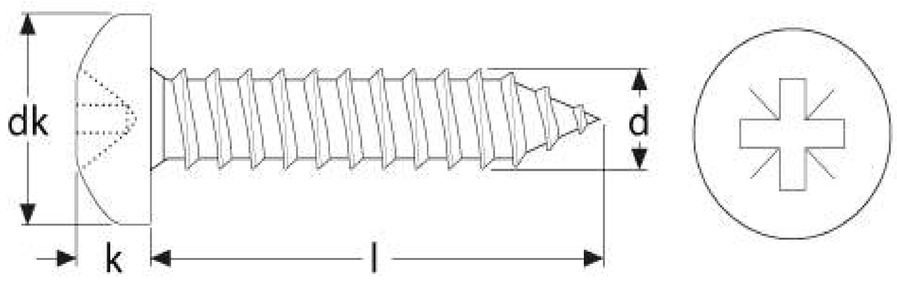

d	3	3,5	4	4,5	5	6
dk	6	7	8	9	10	12
k	2,3	2,4	2,8	2,9	3,5	4,2
nest	PZ1	PZ2	PZ2	PZ2	PZ2	PZ3
l	Range from 16 to 110					

Wood Screw with a Countersunk Head, with Longer Thread, with TORX Socket

S M F 13

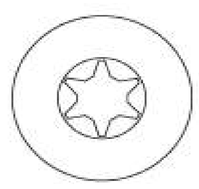

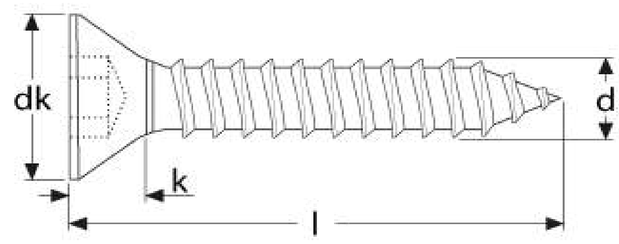

d	3	3,5	4	4,5	5	6
dk	6	7	8	9	10	12
k	1,6	1,8	2,1	2,3	2,8	3,6
nest	TX10	TX10	TX20	TX20	TX25	TX25
l	Range from 12 to 100					

Wood Screw with a Countersunk Head, with Longer Thread, with TORX Socket

S M F 14

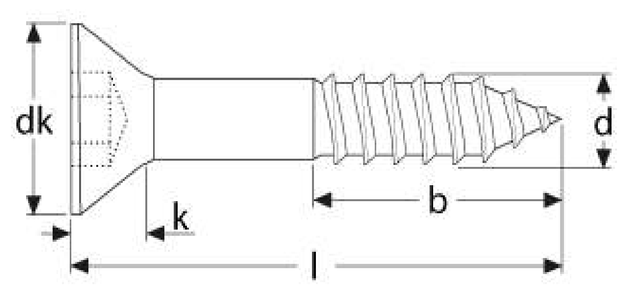

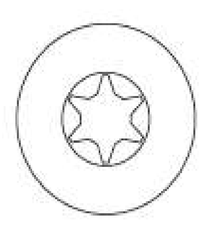

d	3	3,5	4	4,5	5	6	8	10
dk	6	7	8	9	10	12	14	18
k	1,6	1,8	2,1	2,3	2,8	3,6	4,1	4,7
nest	TX10	TX10	TX20	TX20	TX25	TX25	TX40	TX40
l	Range from 25 to 375							

Welded Nut

S M F 15

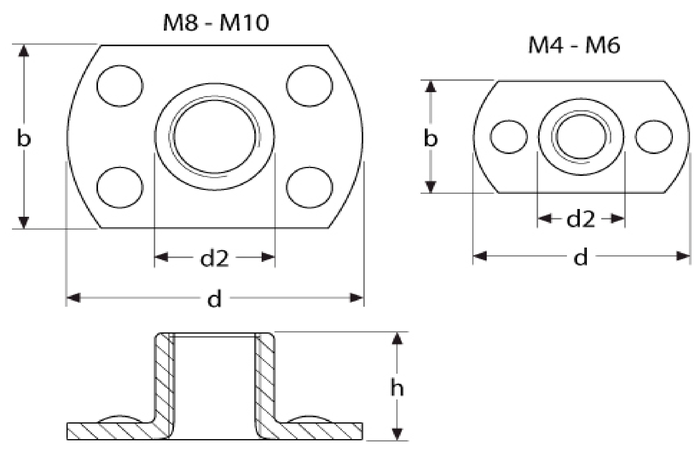

thread	M 3	M 4	M 5	M 6	M 6	M 8	M 8	M 10
d	17	17	19	19	22	22	26	26
d2	4,6	5,5	7	7,5	8,0	9,5	10,5	12,1
h	5	6	7,5	7,5	8,5	8,5	11	10,5
b	9	9	11	11	14	14	18	18

Sleeve Nut

S M F 16

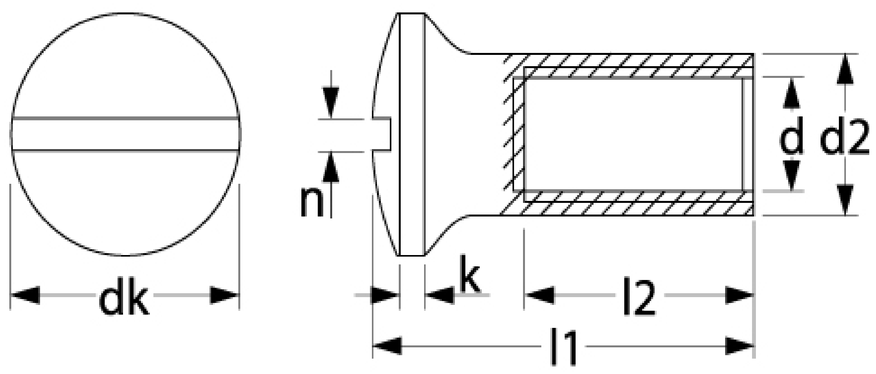

d	M 4	M 5	M 6	M 8
d2	5	6	7,5	10
l1	12	15	15	20
l2	7	9	9	9
dk	7	9	10	15
k	1,5	1,5	1,5	3
n	1,2	1,2	1,6	2

SRISHAA
MACHINED FASTENERS PVT.LTD.

Hexagon Knurled Nut

S M F 17

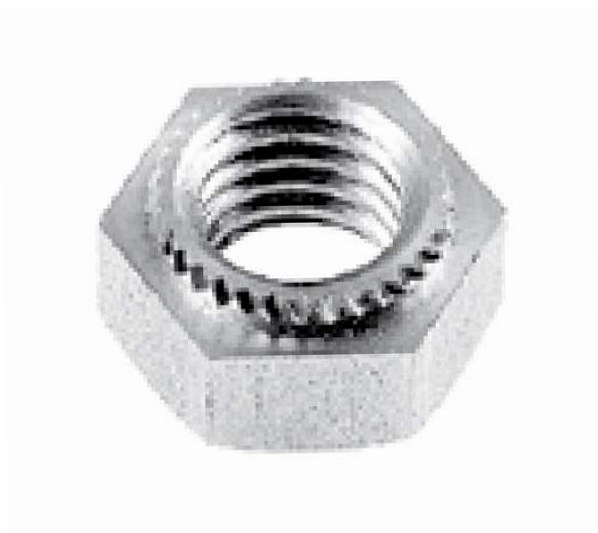

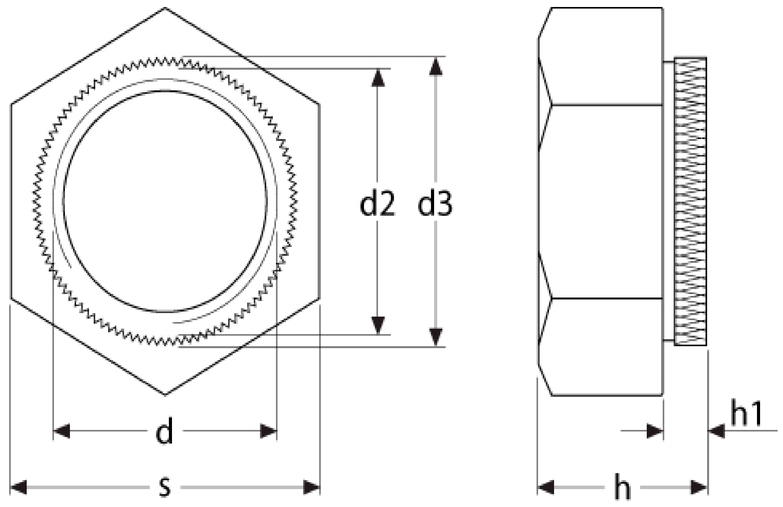

d	d2	d3	h	h1	s
M 2	4,5	4,70	3	0,9	5,5
M 2,5	4,5	4,70	3	0,9	5,5
M 3	4,5	4,70	3	0,9	5,5
M 4	5,5	5,70	3,2	0,9	7
M 5	6,5	6,75	4	0,9	8
M 6	8	8,30	5	0,9	10
M 8	10	10,30	6,5	1,8	13
M 10	12,5	12,85	8	1,8	15
M 12	14,5	14,85	10	2,8	17
M 16	18,5	18,85	13	3,4	22
M 20	23	23,40	16	3,9	27

Dowel Screw

S M F 18

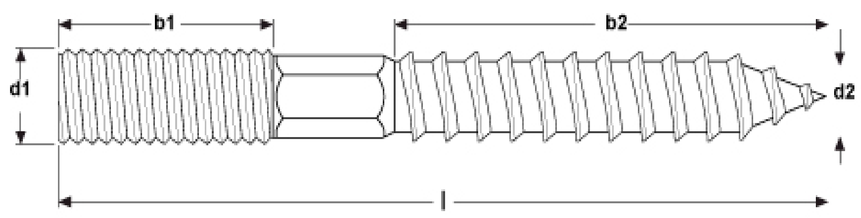

d1	M4	M4	M4	M4	M4	M5	M5
P	0,7	0,7	0,7	0,7	0,7	0,8	0,8
L	20	25	30	35	40	25	40
d2	4,4	4,4	4,4	4,4	4,4	5,5	5,5
b1	10	10	10	15	17	10	15
b2	10	10	15	15	20	15	20

d1	M5	M6	M6	M6	M6	M6	M6
P	0,8	1	1	1	1	1	1
L	50	40	50	60	70	80	90
d2	5,5	6,3	6,3	6,3	6,3	6,3	6,3
b1	20	17	20	20	20	20	30
b2	20	23	25	30	30	30	30

d1	M6	M6	M8	M8	M8	M10	M10
P	1	1	1,25	1,25	1,25	1,5	1,5
L	120	150	50	60	70	60	70
d2	6,3	6,3	7,3	7,3	7,3	9	9
b1	30	30	15	20	25	20	30
b2	30	30	30	30	35	40	30

Countersunk Screw with Special Holes on the Head

S M F 19

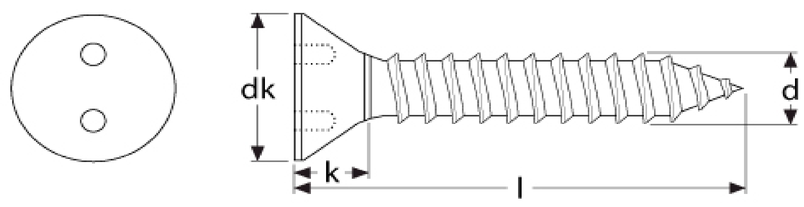

d	2,9	3,5	4,2	4,8	5,5	6,3
dk	5,6	6,8	8,1	9,5	10,8	12,4
k	1,70	2,15	2,60	3,15	3,55	4
l	Range from 6,5 to 50					

Security Screw Countersunk Head

S M F 20

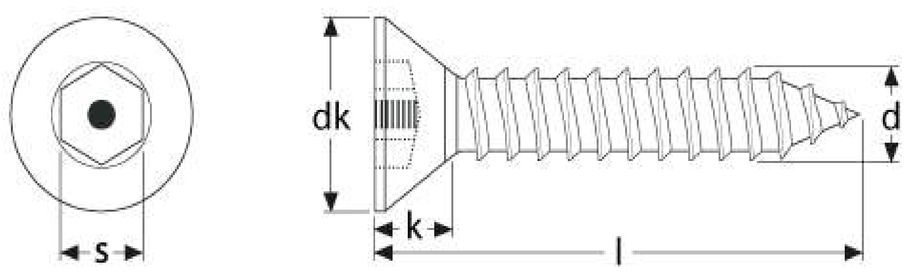

d	3,5	4,2	4,8	5,5	6,3
dk	6,8	8,1	9,5	10,8	12,4
k	2,15	2,60	3,15	3,55	4
s	2	2,5	3	4	4
l	Range from 9,5 to 50				

Security Screw Button Head with Selftapping Thread (Type AB)

S M F 21

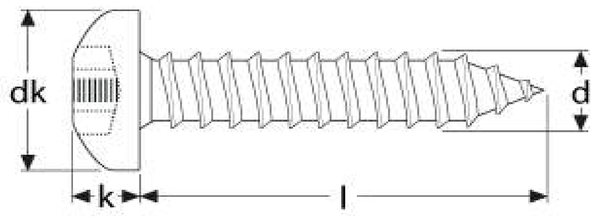

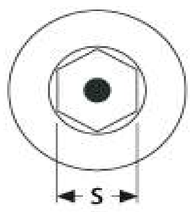

d	3,5	4,2	4,8	6,3
dk	5,7	7,6	9,5	10,5
k	1,65	2,20	2,75	3,30
s	2	2,5	3	4
l	Range from 9,5 to 95			

Security Screw with Countersunk Head

S M F 22

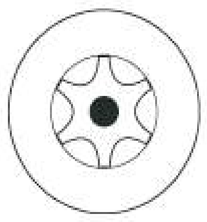

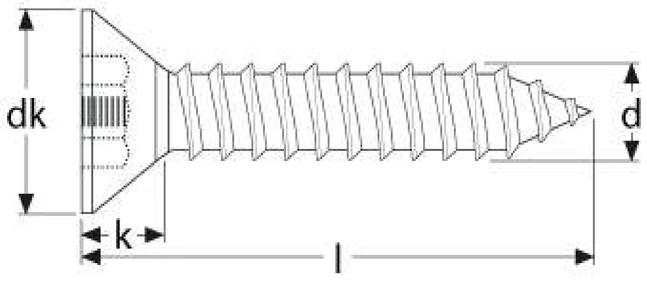

d	3,5	4,2	4,8	5,5	6,3
dk	6,8	8,1	9,5	10,8	12,4
k	2,15	2,60	3,15	3,55	4
nest	TX15 PIN	TX20 PIN	TX25 PIN	TX25 PIN	TX30 PIN
l	Range from 13 to 75				

Pan Head Screw with Special Holes on the Head

S M F 23

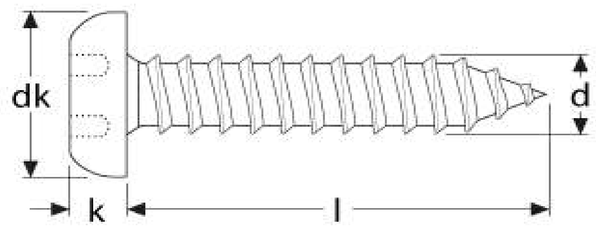

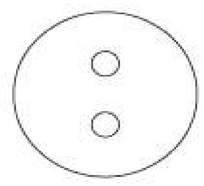

d	2,9	3,5	4,2	4,8	5,2	6,3
dk	5,6	5,7	7,6	9,5	10,5	10,5
k	1,65	1,65	2,20	2,75	3,30	3,30
l	Range from 6,5 to 50					

Wood Screw with Torx Socket Pan Head

S M F 24

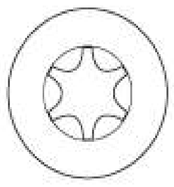

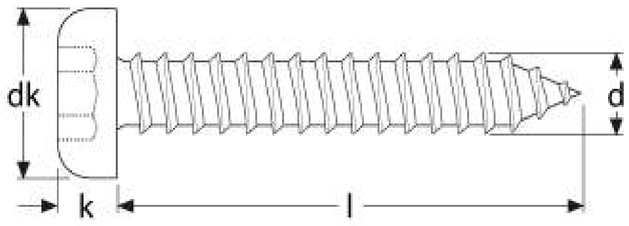

d	3	3,5	4	4,5	5	6
dk	6	7	8	9	10	12
k	2,3	2,4	2,8	2,9	3,5	4,2
nest	TX10	TX10	TX20	TX20	TX25	TX25
l	Range from 16 to 110					

Plastite Screw with Countersunk Head

S M F 25

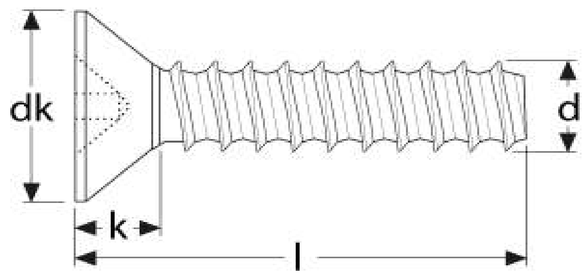

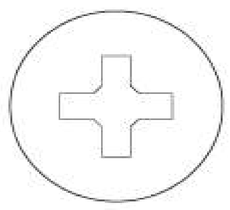

d	3	3,5	4
dk	5,2	6,7	7,7
k	2,20	2,55	2,70
nest	PH1	PH2	PH2
l	Range from 8 to 16		

Plastite Screw with Pan Head

S M F 26

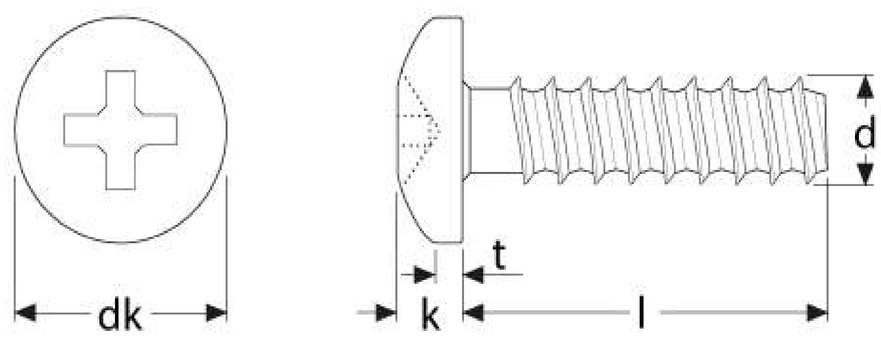

d	3	3,5	4
dk	5,3	6	7,14
k	2,20	2,55	2,70
t	1,80	2,03	2,26
nest	PH1	PH2	PH2
l	Range from 8 to 25		

Selftapping Screws with Hexagonal Head and EPDM Washer, Form A

S M F 27

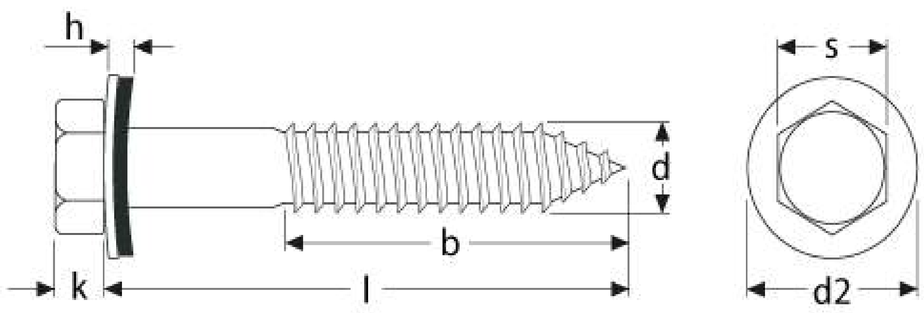

d	l	b	d2	h	k	s
6,5	13	13	16	3	4,6	3/8"
6,5	16	16	16	3	4,6	3/8"
6,5	19	19	16	3	4,6	3/8"
6,5	25	25	16	3	4,6	3/8"
6,5	32	32	16	3	4,6	3/8"
6,5	38	38	16	3	4,6	3/8"
6,5	40	40	16	3	4,6	3/8"
6,5	45	45	16	3	4,6	3/8"
6,5	50	50	16	3	4,6	3/8"
6,5	55	55	16	3	4,6	3/8"
6,5	60	60	16	3	4,6	3/8"
6,5	64	64	16	3	4,6	3/8"
6,5	75	64	16	3	4,6	3/8"
6,5	90	64	16	3	4,6	3/8"
6,5	100	64	16	3	4,6	3/8"
6,5	115	64	16	3	4,6	3/8"
6,5	130	64	16	3	4,6	3/8"
6,5	150	64	16	3	4,6	3/8"
6,5	175	64	16	3	4,6	3/8"
6,5	200	64	16	3	4,6	3/8"
6,5	220	64	16	3	4,6	3/8"
6,5	240	64	16	3	4,6	3/8"
6,5	260	64	16	3	4,6	3/8"

Selftapping Screws with Hexagon Head and EPDM Washer, BZ Form

S M F 28

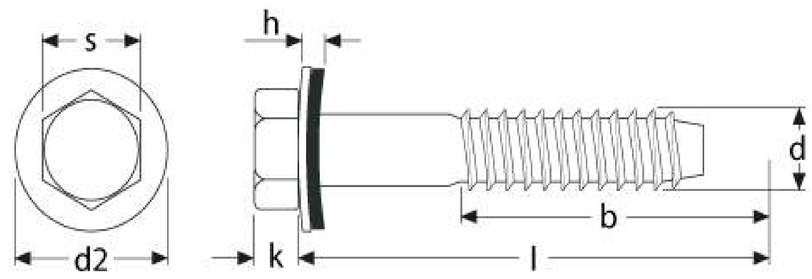

d	l	b	d2	h	k	s
6,5	16	16	16	3	4,6	3/8"
6,5	19	19	16	3	4,6	3/8"
6,5	25	25	16	3	4,6	3/8"
6,5	32	32	16	3	4,6	3/8"
6,5	38	38	16	3	4,6	3/8"
6,5	45	45	16	3	4,6	3/8"
6,5	50	50	16	3	4,6	3/8"
6,5	64	64	16	3	4,6	3/8"
6,5	75	64	16	3	4,6	3/8"
6,5	90	64	16	3	4,6	3/8"
6,5	100	64	16	3	4,6	3/8"
6,5	115	64	16	3	4,6	3/8"
6,5	130	64	16	3	4,6	3/8"
6,5	150	64	16	3	4,6	3/8"
6,5	175	64	16	3	4,6	3/8"
6,5	200	64	16	3	4,6	3/8"
6,5	220	64	16	3	4,6	3/8"
6,5	240	64	16	3	4,6	3/8"
6,5	260	64	16	3	4,6	3/8"

Special Security Screw Sleftapping, Form

S M F 29

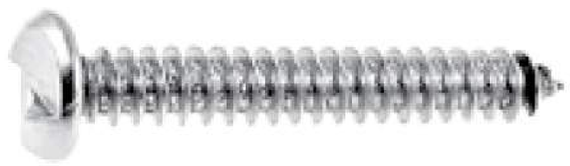

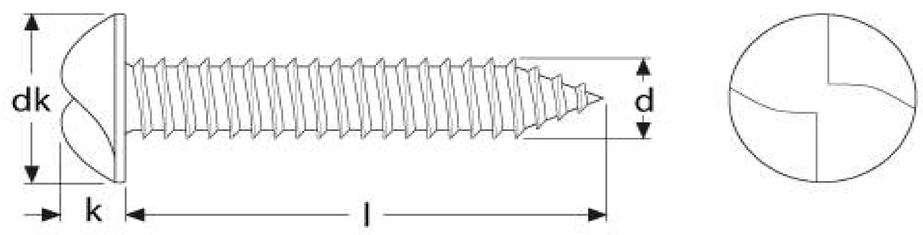

d	2,9	3,5	4,2	4,8	5,5	6,3
k	5,4	6,5	7,3	9,1	10,4	12
dk	2,2	2,6	3	3,5	3,9	4,4
l	Range from 9,5 to 75					

Concrete Bolt with Hexagonal Shank

S M F 30

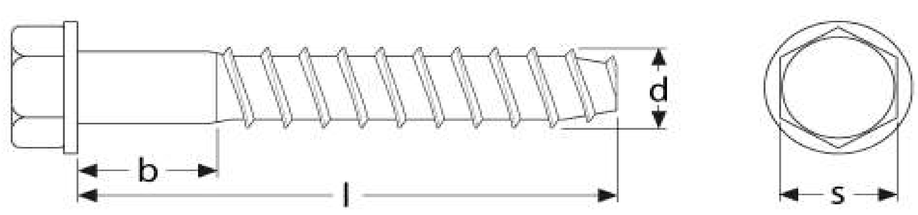

d	l	b	s
10	80	15	13
12	100	15	17

Concrete Screw with Conical Head and TORK Socket

S M F 31

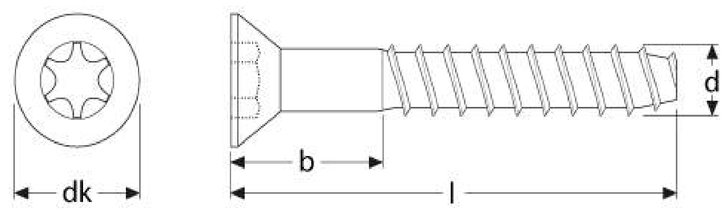

d	l	b	dk	nest
10	80	15	20	TX40

Double Thread for Fixing Solar Panels

S M F 32

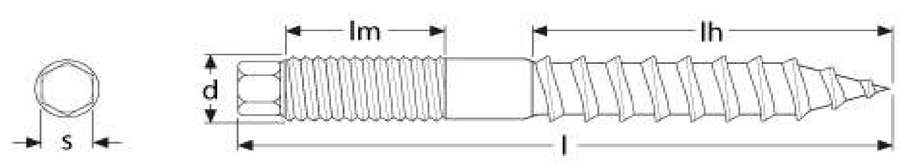

d	10	10	10	10	10	12	12	12	12	12	12
l	160	180	200	250	300	200	250	300	350	400	400
lh	70	67	67	67	67	80	100	100	100	100	100
lm	70	85	85	85	150	100	100	150	195	150	220
s	7	7	7	7	7	9	9	9	9	9	9

Double-Threaded set Complete with DIN 125, DIN 9021, DIN 934

S M F 33

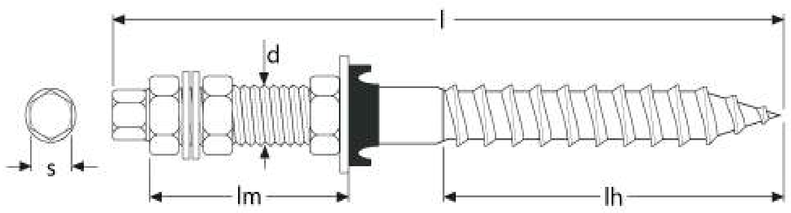

d	8	10	10	10	10	10	12	12	12	12	12
l	180	160	180	200	250	300	200	250	300	350	400
lh	62	70	67	67	67	67	80	100	100	100	100
lm	50	70	85	85	150	150	100	100	150	195	220
s	7	7	7	7	7	7	9	9	9	9	9

Double Thread Included with Din 6923

S M F 34

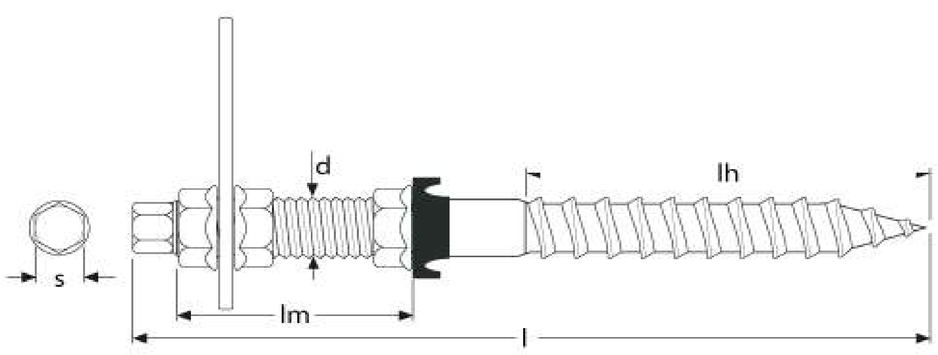

d	10	10	10	10	10	12	12	12	12	12
l	160	180	200	250	300	200	250	300	350	400
lh	70	67	67	67	67	80	100	100	100	100
lm	70	85	85	85	150	100	100	150	195	220
s	7	7	7	7	7	9	9	9	9	9

Double Thread Included with DIN 6923

S M F 35

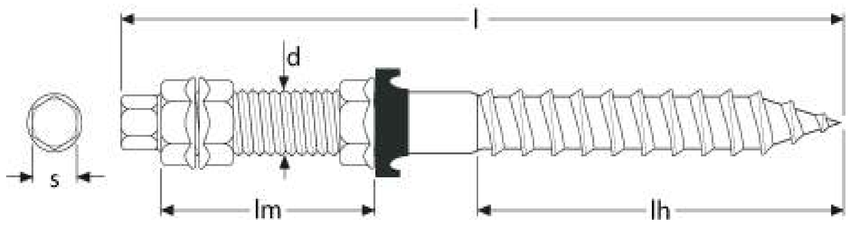

d	10	10	10	10	10	12	12	12	12	12
l	160	180	200	250	300	200	250	300	350	400
lh	70	67	67	67	67	80	100	100	100	100
lm	70	85	85	85	150	100	100	150	195	220
s	7	7	7	7	7	9	9	9	9	9

Hammer Head Screw for Profile Type 28/15

S M F 36

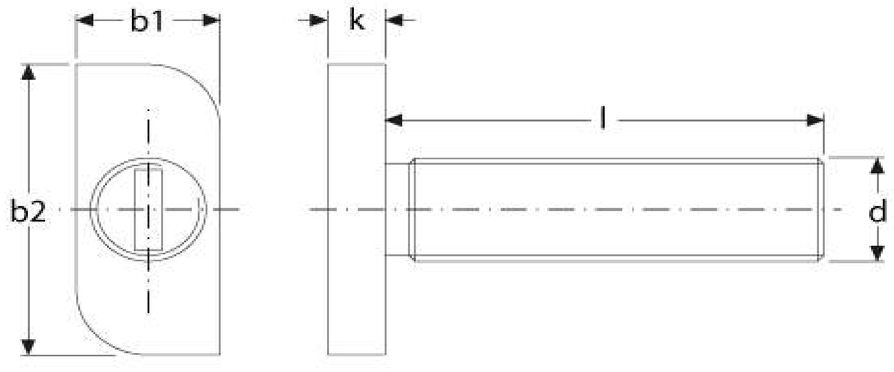

d	M 8	M 10	M 12
k	4	4,5	6
b1	10	10	10
b2	22,5	22,5	22,5
l	Range from 16 to 200		

Hammer Head Screw with Square Pin Type 28/15

S M F 37

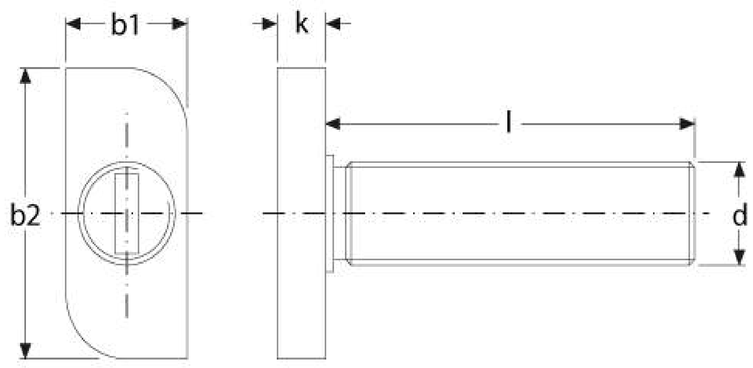

d	M 8	M 8	M 8
l	20	40	45
k	4	4	4
b1	10	10	10
b2	22,5	22,5	22,5

Hammer Head Screw with Square Channel Type 41/41

S M F 38

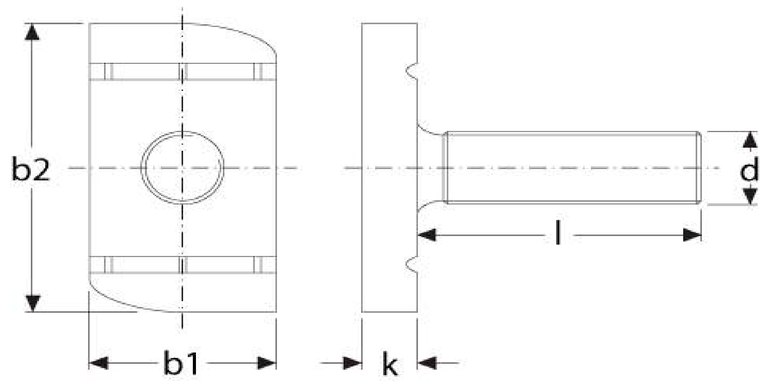

d	i	k	b1	b2
M 8	30	6	20	35,2
M 10	30	6	20	35,2

Profile Nut with Protection Type 41/41

S M F 39

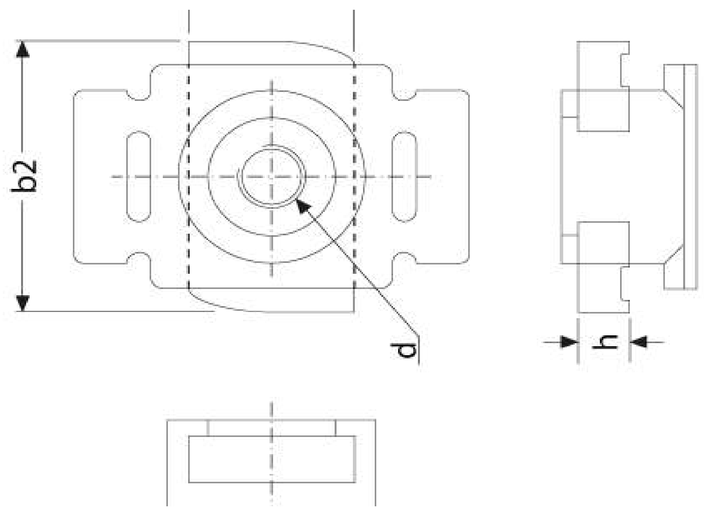

d	b1	b2	h
M 6	19,5	34,5	6
M 8	19,5	34,5	6z

Hammer Nut

S M F 40

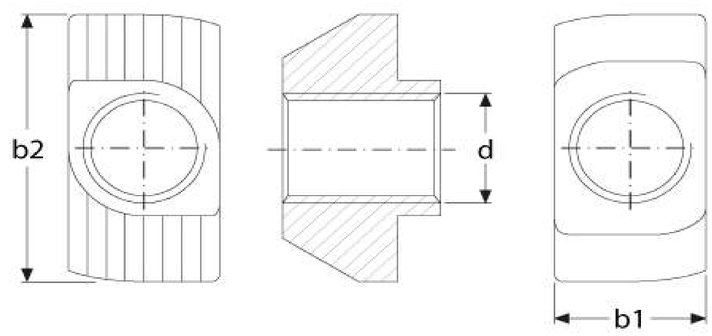

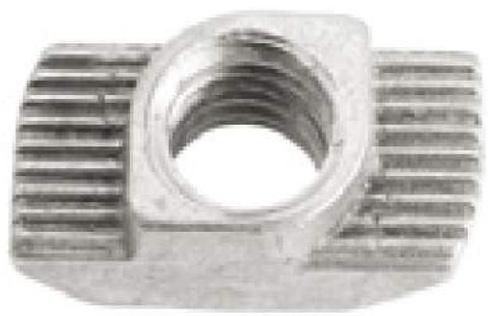

d	b1	b2
M 8	9,9	19,5

Double Thread for Attaching Solar Panels to Steel Constructions with Rubber Pads for Corrugated Sheets

S M F 41

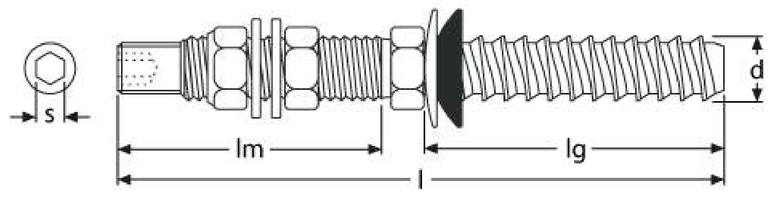

d	lg	lm	l	s
M 8	80	50	136	5
M 8	80	70	156	5
M 8	100	50	156	5
M 8	100	70	176	5
M 8	125	50	181	5
M 8	125	70	201	5
M 8	150	50	206	5
M 8	150	70	226	5
M 8	160	50	216	5
M 8	160	70	236	5
M 8	200	50	256	5
M 8	200	70	276	5

U Bolt

S M F 42

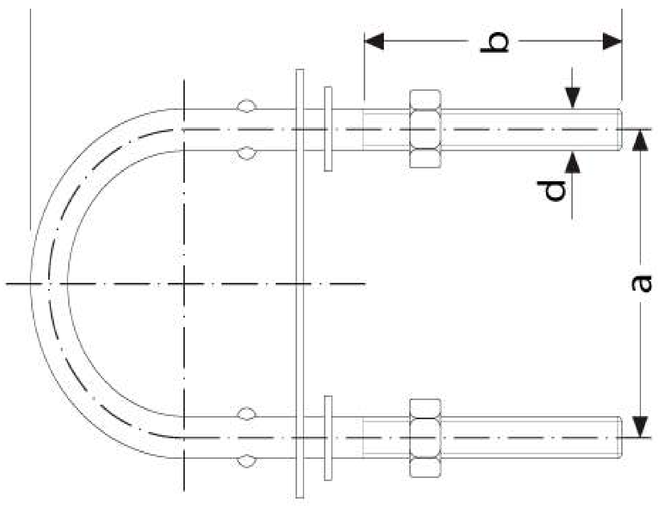

a	30	35	35	35	35	50	50	60
d	4	5	6	8	8	10	10	12
h	64	80	90	80	100	90	130	150
b	30	40	40	40	50	40	55	65

Clothes-line-hooks

S M F 43

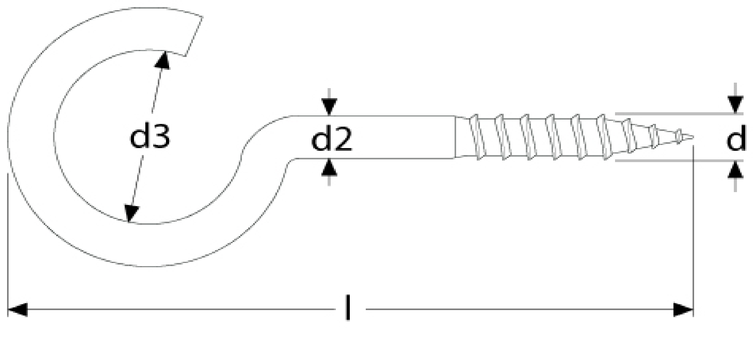

d	2,9	3,3	3,3	4,4	4,8	5,2	5,8
d2	2,9	3,3	3,3	4,4	4,8	5,2	5,8
d3	12	16	16	16	22	26	26
l	40	50	60	50	65	80	100

Eyebolt

S M F 44

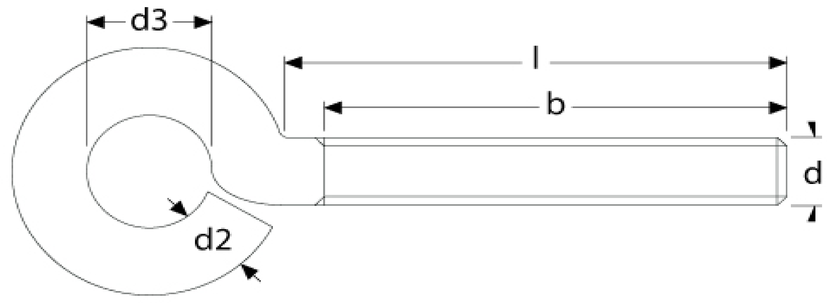

d	M 5	M 5	M 5	M 6	M 6	M 6	M 6	M 8	M 8	M 10
l	30	40	50	20	30	40	60	60	80	70
b	27	37	47	18	27	37	57	57	77	65
d2	4,40	4,40	4,40	5,25	5,25	5,25	5,25	7,05	7,05	8,85
d3	8	8	8	10	10	10	10	10	10	15

Eyebolt for wood

S M F 45

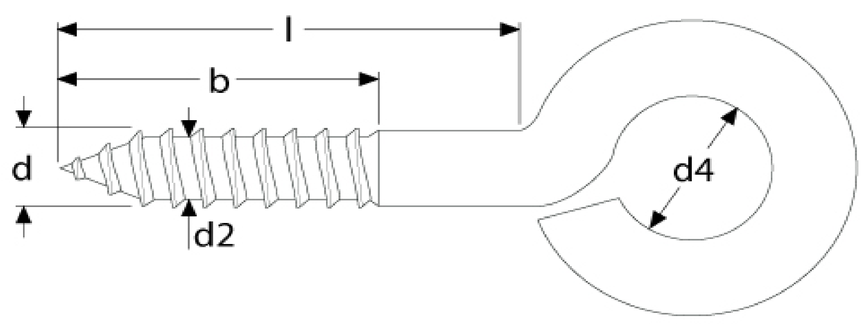

l	3,50	4	4,50	4,70	5,25
l	20	30	40	30	30
b	13	20	25	20	17
d2	3,1	3,5	3,8	4,2	4,2
d3	10	8	16	8	10

Threaded Insert

S M F 46

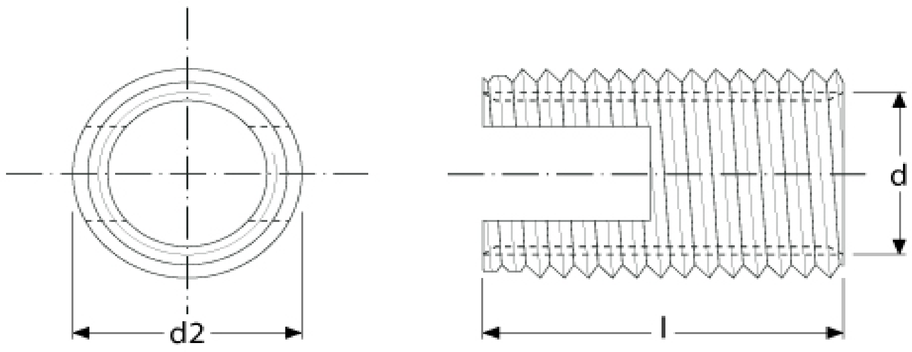

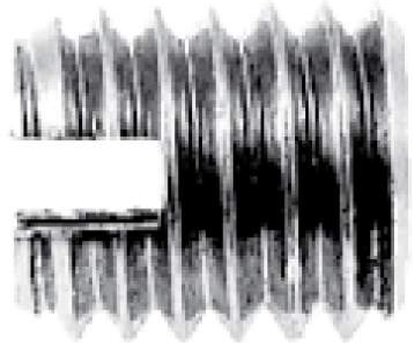

d	3	4	5	6	8	10	12	14	16	18	20
d2	5	6	8	10	12	14	16	18	20	22	26
l	6	8	10	14	15	18	22	24	22	24	27

Threaded Plate, Type 28/15

S M F 47

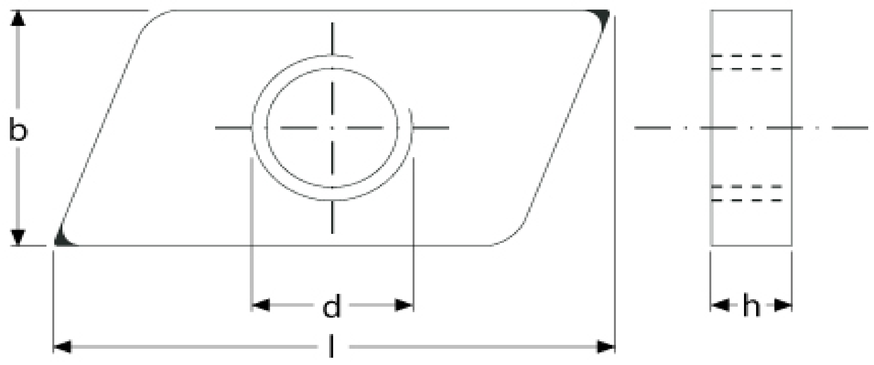

d	l	b	h
M 8	27	13	4
M 10	27	13	4v

Blind Rivet Nut Flat Head

SMF 48

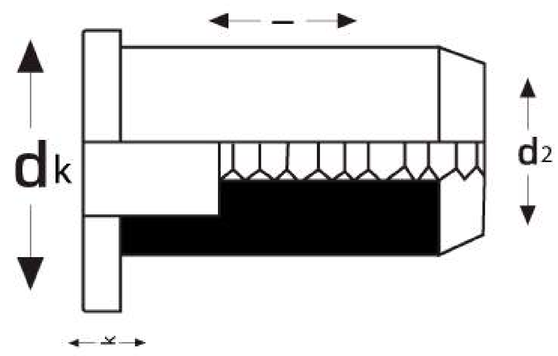

d	M 4	M 5	M 6	M 8	M 10
Joining Range	0,5 - 2,0	0,5 - 2,0	0,5 - 3,0	1,0 - 3,5	1,0 - 3,5
dk	9	10	12,3	14,5	17
k	0,8	1	1,3	1,5	1,6
d2	5,9	6,9	8,9	10,9	12,9
Tightening	1	2	4,5	5,5	11

Blind Rivet Nut Reduce Head

SMF 49

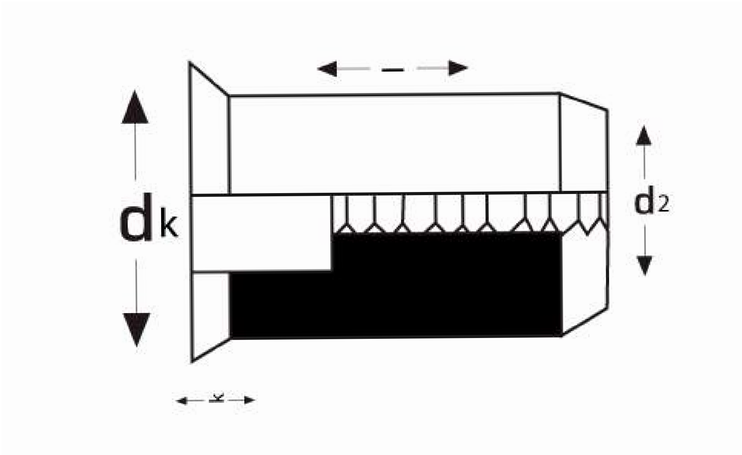

d	M 4	M 5	M 6	M 8	M 10
Joining Range	0,5 - 2,0	0,5 - 2,0	0,5 - 2,5	1,0 - 3,5	1,0 - 3,5
dk	7	8	10	12	14
k	0,5	0,5	0,6	0,6	0,7
d2	5,9	6,9	8,9	10,9	12,9
Tightening	0,8	1,5	3,5	4,5	8,5

Blind Rivet Nut Countersunk Head

S M F 50

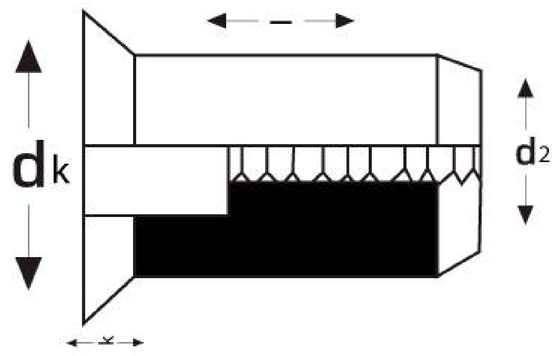

d	M 4	M 5	M 6	M 8	M 10
Joining Range	1,5 - 3,0	1,5 - 3,5	1,5 - 4,0	2,0 - 4,5	2,0 - 5,0
dk	9	10	12	14	16
k	1,5	1,5	1,5	1,5	1,5
d2	5,9	6,9	8,9	10,9	12,9
Tightening	0,8	1,5	3,5	4,5	8,5

Cheese Head Security Selftapping Screws with Two

S M F 51

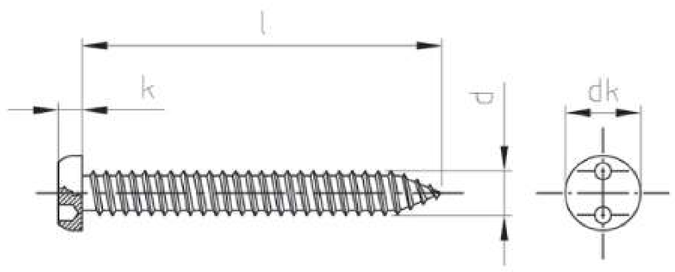

d	2,9	3,9	4,2	4,8	5,5	6,3
dk	5,6	5,7	7,6	9,6	10,5	10,5
k	1,65	1,65	2,2	2,75	3,3	3,3
l	Range from 6,5 to 50					

Cheese Head Security Screws with Two Hole Drive

S M F 52

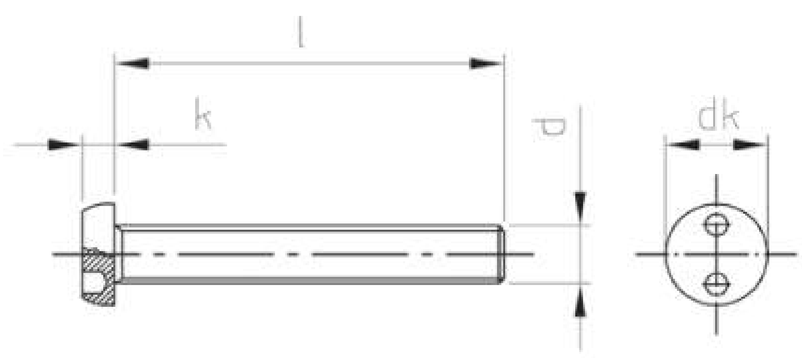

d	M 3	M 3,5	M 4	M 5	M 6
dk	5,7	6,6	7,6	9,5	10,5
k	1,65	1,9	2,2	2,75	3,3
l	Range from 6 to 40				

Countersunk Head Security Selftapping Screws with Two Hole Drive

S M F 53

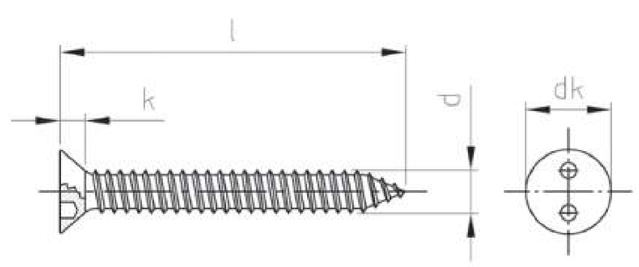

d	2,9	3,9	4,2	4,8	5,5	6,3
dk	5,6	6,8	8,1	9,6	10,8	12,4
k	1,7	2,15	2,6	3,15	3,55	4
l	Range from 6,5 to 50					

Countersunk Head Securit Screws with Two Hole Drive

S M F 54

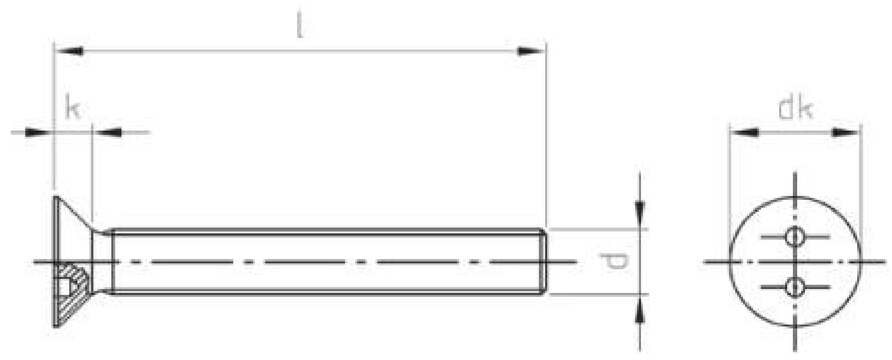

d	M 3	M 4	M 5	M 6
dk	6	8	10	12
k	1,75	2,4	2,95	3,45
l	Range from 6 to 50			

Raised CSK Selftapping Head Security Screws with Two Hole Drive

S M F 55

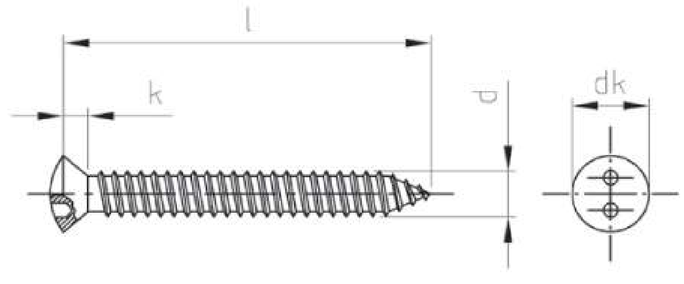

d	3,5	4,2	4,8
dk	5,7	7,6	9,5
k	1,65	2,2	2,75
l	Range from 13 to 50		

Pan Head Selftapping Security Screws with Two Hole Drive

S M F 56

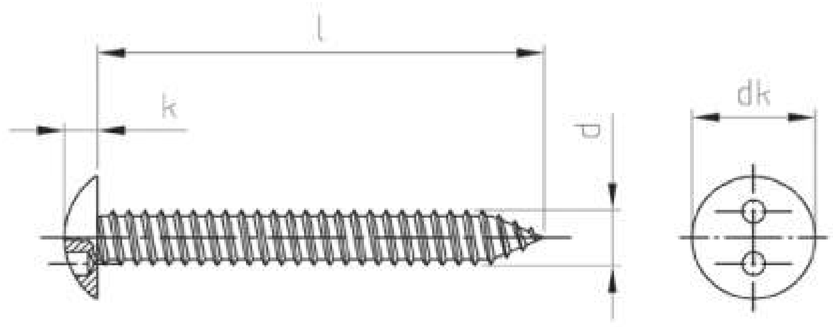

d	**4,2**	**4,8**
dk	9,5	10,5
k	2,2	2,75
l	Range from 9,5 to 50	

Button Head Selftapping Security Screws Hex Socket Drive + Pin

S M F 57

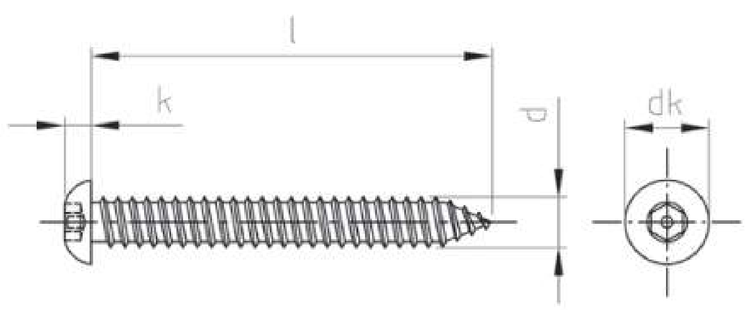

d	**3,5**	**4,2**	**4,8**	**6,3**
dk	5,7	7,6	9,5	10,5
k	1,65	2,2	2,75	3,3
l	Range from 6 to 50			

Button Head Security Screws Hex Socket Drive + Pin

S M F 58

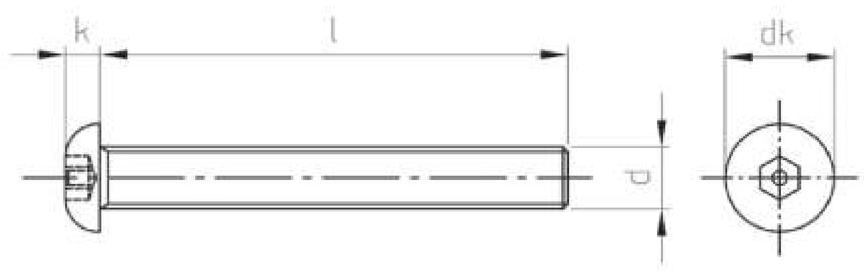

d	M 3	M 4	M 5	M 6	M 8	M 10
dk	5,7	7,6	9,5	10,5	14	17,5
k	1,65	2,2	2,75	3,3	4,4	5,5
l	Range from 6 to 50					

CSK Head Security Screws Hex Socket Drive + Pin

S M F 59

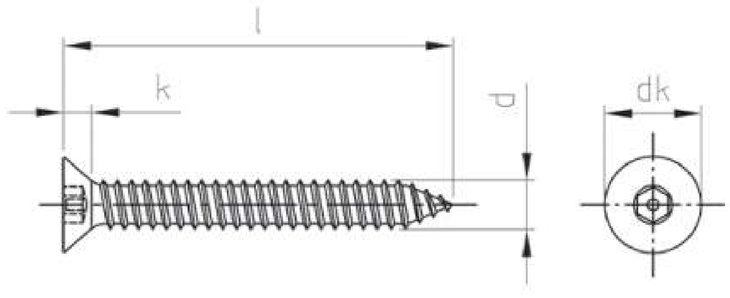

d	3,5	4,2	4,8	5,5	6,3
dk	6,8	8,1	9,5	10,8	12,4
k	2,15	2,6	3,15	3,55	4
l	Range from 9.5 to 50				

CSK Head Security Screws Hex Socket Drive + Pin

S M F 60

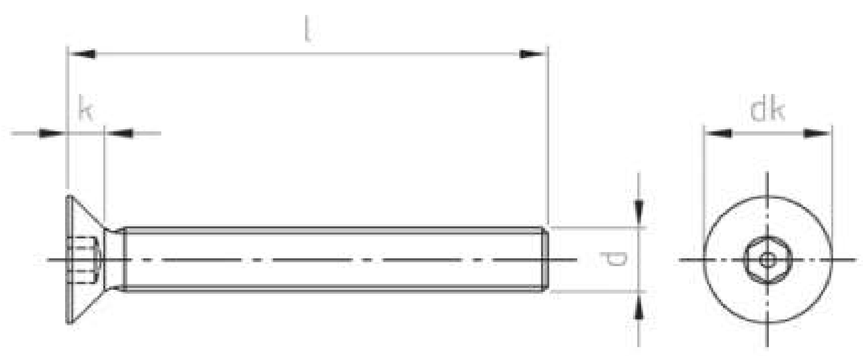

d	M 3	M 4	M 5	M 6	M 8	M 10
dk	6	8	10	12	16	20
k	1,75	2,4	2,95	3,45	4,6	5,5
l	Range from 6 to 50					

Button Security Srews Six Lobe Drive + Pin

S M F 61

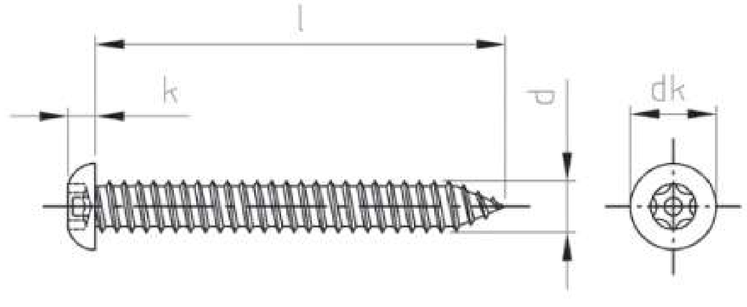

d	3,5	4,2	4,8	5,5	6,3
dk	5,7	7,6	9,5	9,9	10,5
k	1,65	2,2	2,75	2,9	3,3
l	Range from 13 to 75				

Button Security Srews Six Lobe Drive + Pin

S M F 62

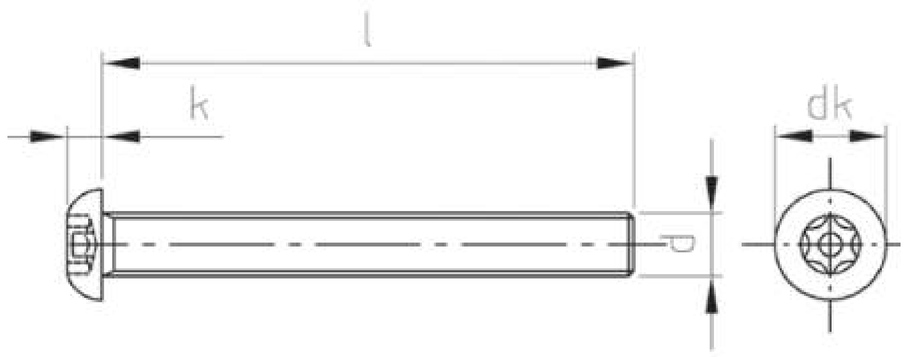

d	M 3	M 4	M 5	M 6	M 8	M 10
dk	5,7	7,6	9,5	10,5	14	17,5
k	1,65	2,2	2,75	3,3	4,4	5,5
l	Range from 6 to 70					

Button Security Srews Six Lobe Drive + Pin

S M F 63

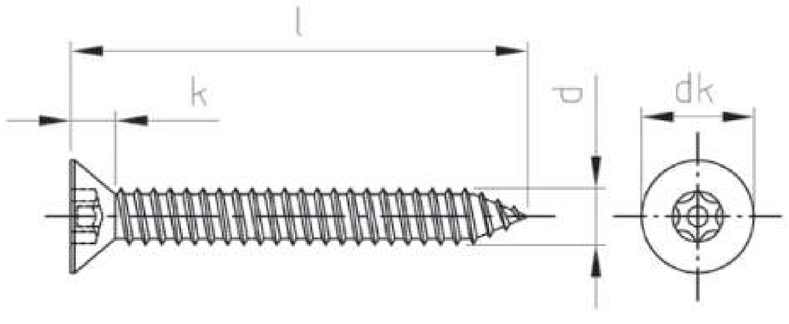

d	3,5	4,2	4,8	5,5	6,3
dk	6,8	8,1	9,5	10,8	12,4
k	2,15	2,6	3,15	3,55	4
l	Range from 13 to 75				

CSK Head Security Screws with Six Lobe Drive + Pin

S M F 64

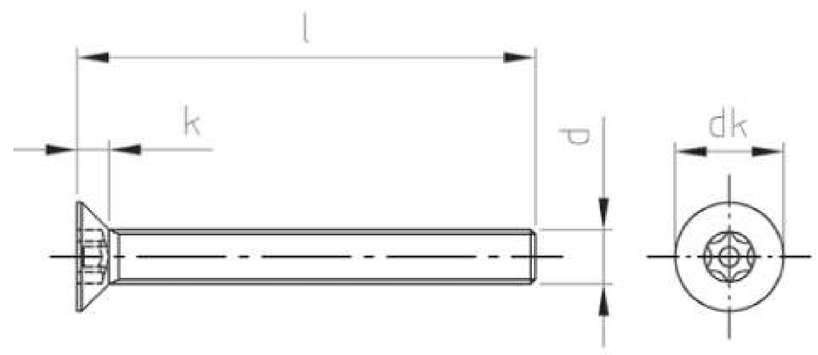

d	M 3	M 3,5	M 4	M 5	M 6
dk	6	7	8	10	12
k	1,75	1	2,4	2,95	3,45
l	Range from 6 to 80				

Wedge Anchor

S M F 65

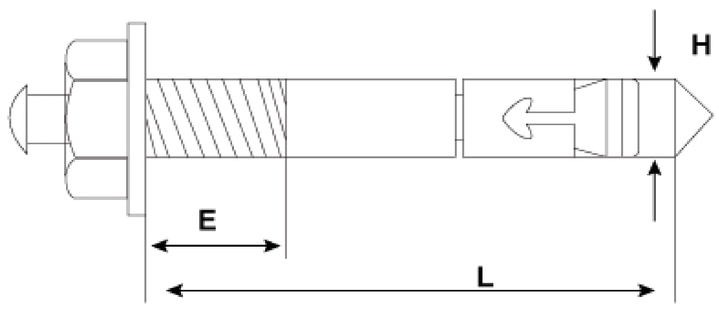

MxL	M6x45	M6x60	M6x70	M6x80	M6x90	M6x100	M6x110
Drill "H"	6	6	6	6	6	6	6
Hole depth min "L"	50	55	55	55	55	55	55
Max fixture thickness "E"	1	1	11	22	31	41	51
Min Substrate thickness	100	100	100	100	100	100	100
Min Depth of anchor	35	50	50	50	50	50	50
Pull out load KN C25	2,51	3,67	3,67	3,67	3,67	3,67	3,67
Shear load KN C25	2,51	2,91	2,91	2,91	2,91	2,91	2,91

MxL	M6x120	M6x130	M6x140	M6x150	M6x160	M6x170	M6x180
Drill "H"	6	6	6	6	6	6	6
Hole depth min "L"	55	55	55	55	55	55	55
Max fixture thickness "E"	61	71	81	91	101	111	121
Min Substrate thickness	100	100	100	100	100	100	100
Min Depth of anchor	50	50	50	50	50	50	50
Pull out load KN C25	3,67	3,67	3,67	3,67	3,67	3,67	3,67
Shear load KN C25	2,91	2,91	2,91	2,91	2,91	2,91	2,91

SRISHAA
MACHINED FASTENERS PVT.LTD.

Wedge Anchor

S M F 65

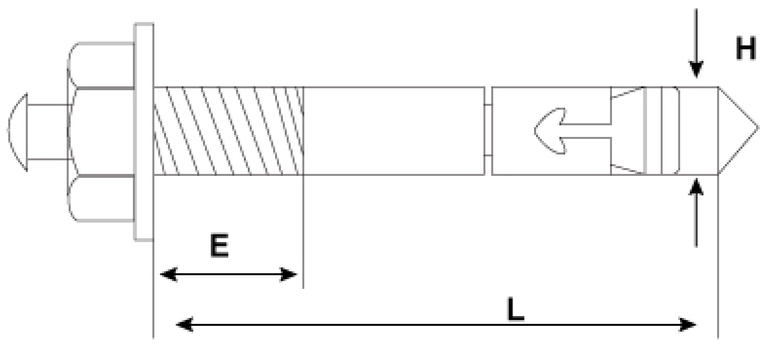

MxL	M8x50	M8x60	M8x75	M8x90	M8x115	M8x130	M8x155
Drill "H"	8	8	8	8	8	8	8
Hole depth min "L"	40	50	65	65	65	65	65
Max fixture thickness "E"	4	4	4	19	44	59	84
Min Substrate thickness	100	100	100	100	100	100	100
Min Depth of anchor	35	45	60	60	60	60	60
Pull out load KN C25	1,61	2,76	4,84	4,84	4,84	4,84	4,84
Shear load KN C25	2,21	3,81	5,31	5,31	5,31	5,31	5,31

MxL	M10x70	M10x90	M10x120	M10x150	M10x170	M10x210	M10x230
Drill "H"	10	10	10	10	10	10	10
Hole depth min "L"	65	70	70	70	70	70	70
Max fixture thickness "E"	5	10	40	70	90	130	150
Min Substrate thickness	110	110	110	110	110	110	110
Min Depth of anchor	52	67	67	67	67	67	67
Pull out load KN C25	3,74	6,03	6,03	6,03	6,03	6,03	6,03
Shear load KN C25	5,08	8,19	8,19	8,19	8,19	8,19	8,19

SRISHAA
MACHINED FASTENERS PVT.LTD.

Wedge Anchor

S M F 65

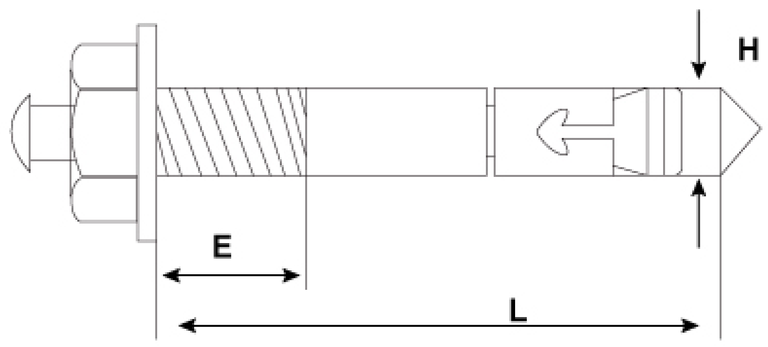

MxL	M12x75	M12x90	M12x110	M12x140	M12x160	M12x180	M12x220
Drill "H"	12	12	12	12	12	12	12
Hole depth min "L"	60	75	85	85	85	85	85
Max fixture thickness "E"	5	5	18	48	68	88	128
Min Substrate thickness	130	130	130	130	130	130	130
Min Depth of anchor	55	70	77	77	77	77	77
Pull out load KN C25	5,00	7,82	9,29	9,29	9,29	9,29	9,29
Shear load KN C25	11,33	11,77	11,77	11,77	11,77	11,77	11,77

MxL	M12x250	M14x80	M14x100	M14x120	M14x145	M14x170	M14x220
Drill "H"	12	14	14	14	14	14	14
Hole depth min "L"	85	65	85	100	100	100	100
Max fixture thickness "E"	158	5	5	12	36	61	111
Min Substrate thickness	130	150	150	150	150	150	150
Min Depth of anchor	77	59	79	92	92	92	92
Pull out load KN C25	9,29	4,69	8,41	11,19	11,19	11,19	11,19
Shear load KN C25	11,77	10,94	16,06	16,06	16,06	16,06	16,06

SRISHAA
MACHINED FASTENERS PVT.LTD.

Wedge Anchor

S M F 65

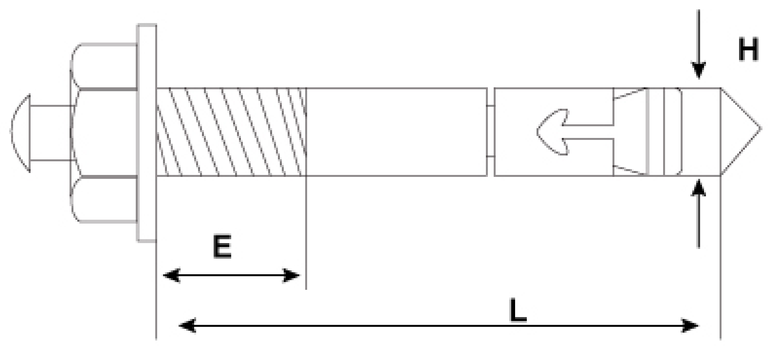

MxL	M14x250	M16x90	M16x125	M16x145	M16x170	M16x220	M16x250
Drill "H"	14	16	16	16	16	16	16
Hole depth min "L"	100	75	110	110	110	110	110
Max fixture thickness "E"	141	4	4	22	47	97	127
Min Substrate thickness	150	168	168	168	168	168	168
Min Depth of anchor	92	69	104	104	104	104	104
Pull out load KN C25	11,19	6,24	14,01	14,01	14,01	14,01	14,01
Shear load KN C25	16,06	13,78	21,94	21,94	21,94	21,94	21,94

MxL	M16x280	M20x120	M20x170	M20x220	M20x270	M20x180	M20x260
Drill "H"	16	20	20	20	20	24	24
Hole depth min "L"	110	105	135	135	135	160	160
Max fixture thickness "E"	157	5	23	73	123	4	84
Min Substrate thickness	168	206	206	206	206	206	206
Min Depth of anchor	104	93	125	125	125	150	150
Pull out load KN C25	14,01	10,92	19,09	19,09	19,09	25,36	25,36
Shear load KN C25	21,94	24,04	32,17	32,17	32,17	46,34	46,34

Studbolts ASTM A193

S M F 66

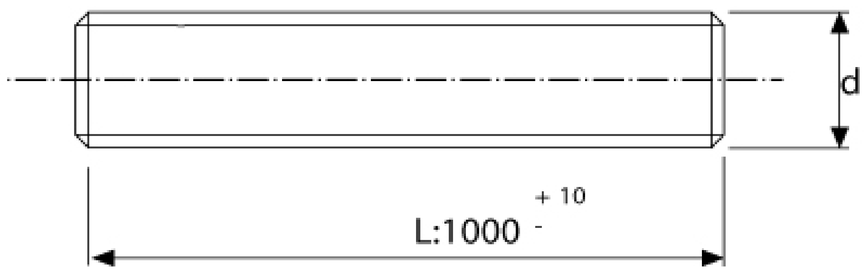

inch	1/2	5/8	3/4	7/8	1"	1"1/8	1"1/4	1"3/8	1"1/2	1"5/8	1"3/4	1"7/8	2"
Thread per inch	13	11	10	9	8	8	8	8	8	8	8	8	8

Hex Nuts ASTM A194 Grade 2H

S M F 67

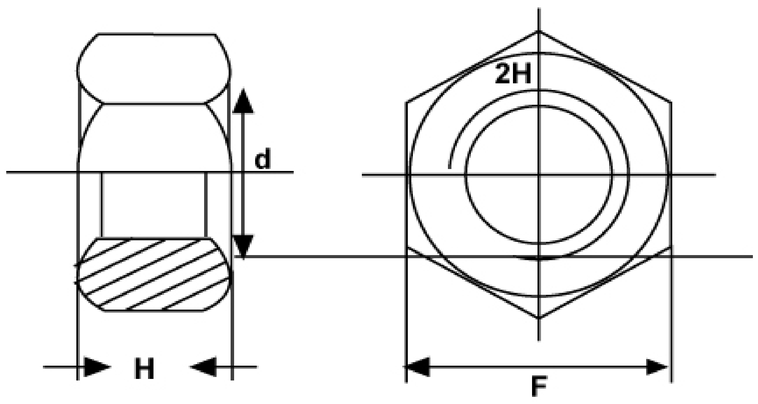

inch	1/2	5/8	3/4	7/8	1	1"1/8	1"1/4	1"3/8	1"1/2	1"5/8	1"3/4	1"7/8	2"
Thread per inch	13	11	10	9	8	28,2	30,95	34,15	37,3	40,5	43,65	46,85	50
H	12/3	15,5	18,65	21,85	25	28,2	30,95	34,15	37,3	40,5	43,65	46,85	50
F / inch	7/8	1"1/16	1"1/4	1"7/16	1"5/8	1"13/16	2"	2"3/16	2"3/8	2"9/16	2"3/4	2"15/16	3"1/8
mm	22,2	27	31,75	36,5	41,3	46	50,8	55,6	60,3	65,1	69,85	74,6	79,4

Direct Tension Indicator

S M F 68

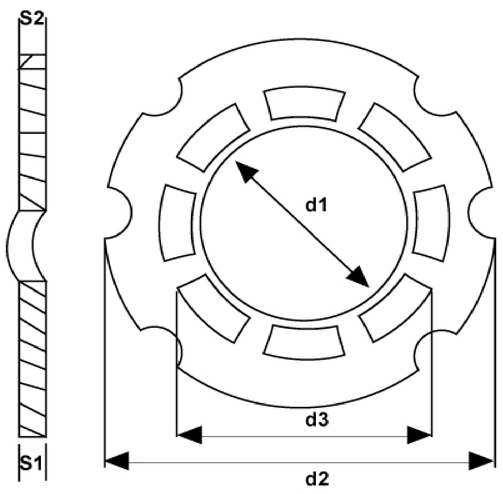

Dimension		M12	M16	M20	M22	M24	M27	M30	M36
d1	min	12,55	16,75	20,95	23,05	25,15	28,30	31,45	37,75
	max	12,65	16,85	21,05	23,15	25,25	28,40	31,55	37,85
d2	min	26,0	35,2	44,0	48,4	52,8	59,4	66,0	79,2
	max	32,5	36,8	46,0	50,6	55,2	62,1	69,0	82,8
h1 min.	8.8	3,2	3,2	3,6	3,6	4	4	4	4,8
	10.9	3,4	3,6	3,6	4	4	4	4,8	4,8
h2 max.	8.8	5,0	5,5	6,0	6,0	7,0	7,0	7,0	7,5
	10.9	5,0	6,0	6,0	7,0	7,0	7,0	7,5	7,5
d3 max.		19,5	25	29	33	38	43	46,5	56
8.8		4	4	5	5	5	6	7	8
10.9		4	4	6	6	6	7	8	9

Compression loads		M12	M16	M20	M22	M24	M27	M30	M36
Designacion H8	min	47	88	137	170	198	257	314	458
	max	56	106	164	204	238	308	377	550
Designacion H10	min	59	110	172	212	247	321	393	572
	max	71	132	206	254	296	385	472	688

Contact-Lock Washers - Type L

S M F 69

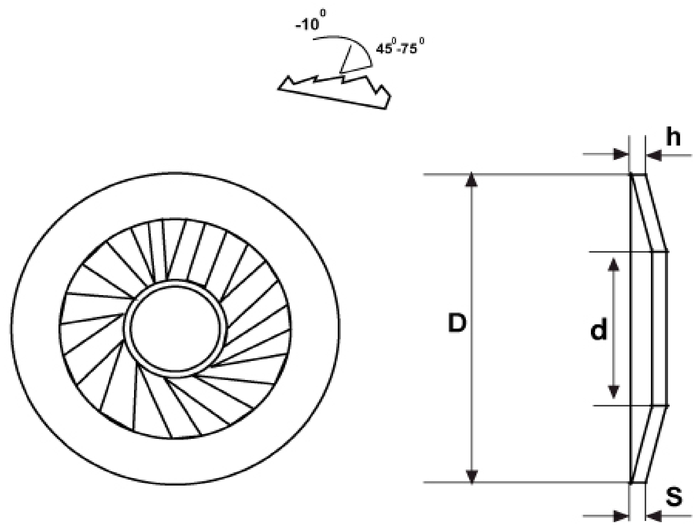

bolt mmm	M3	M4	M5	M6	M8	M10	M12
d H14	3,1	4,1	5,1	6,1	8,2	10,2	12,4
D js15	10	14	16	18	22	27	32
Characteristics							
S Nominal	0,6	1	1,2	1,4	1,6	1,8	2
Tolerance	+ - 0,03	+ - 0,04	+ - 0,04	+ - 0,04	+ - 0,05	+ - 0,05	+ - 0,05
h max	1,2	1,8	2,1	2,5	2,7	3,1	3,6

Contact-Lock Washers - Type M

S M F 70

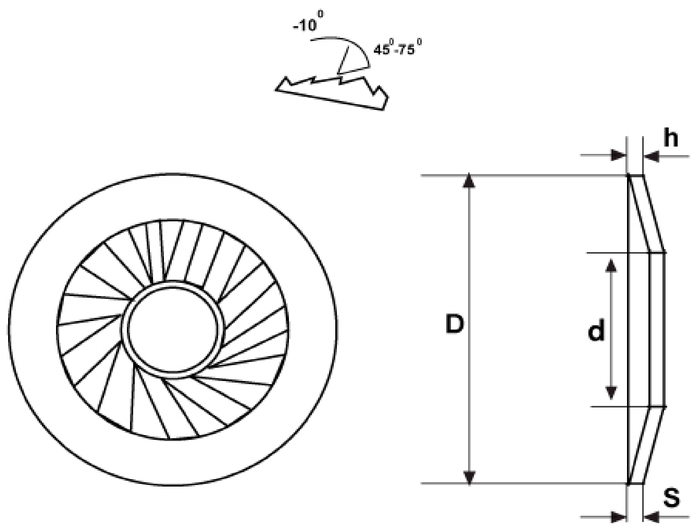

bolt mmm	M3	M4	M5	M6	M7	M8	M9
d H14	3,1	4,1	5,1	6,1	7,2	8,2	9,2
D js15	8	10	12	14	18	18	20
Characteristics							
S Nominal	0,6	0,9	1,1	1,3	1,4	1,4	1,6
Tolerance	+ 0,03 -	+ 0,04 -	+ 0,04 -	+ 0,04 -	+ 0,04 -	+ 0,05 -	+ 0,05 -
h max	1	1,4	1,8	2,1	2,4	2,35	2,6

bolt mmm	M10	M12	M14	M16	M20
d H14	10,2	12,4	14,4	16,4	20,5
D js15	22	27	30	32	40
Characteristics					
S Nominal	1,6	1,8	2,4	2,8	3,2
Tolerance	+ 0,05 -	+ 0,05 -	+ 0,06 -	+ 0,06 -	+ 0,06 -
h max	2,75	3,1	3,7	4,1	4,9

Contact-Lock Washers - Type Z

S M F 71

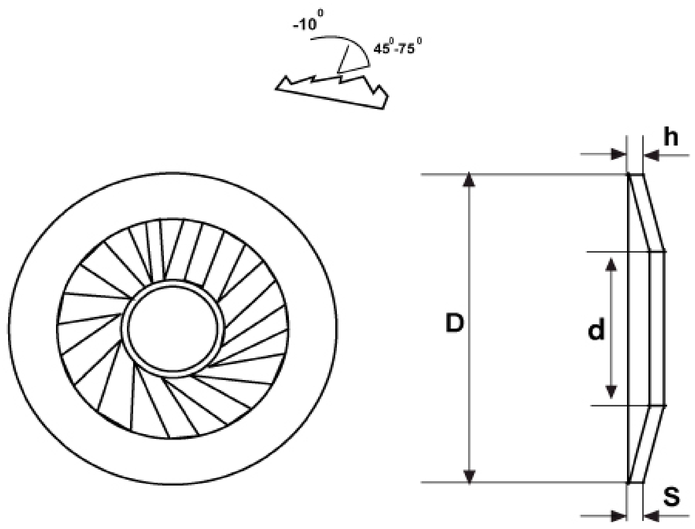

bolt mmm	M3	M4	M5	M6	M7	M8	M10	M12
d H14	3,1	4,1	5,1	6,1	7,2	8,2	10,2	12,4
D js15	6	8	10	12	14	16	20	24
Characteristics								
S Nominal	0,5	0,8	1	1,2	1,4	1,4	1,6	1,8
Tolerance	$^{+0,03}_{-}$	$^{+0,03}_{-}$	$^{+0,04}_{-}$	$^{+0,04}_{-}$	$^{+0,04}_{-}$	$^{+0,04}_{-}$	$^{+0,05}_{-}$	$^{+0,05}_{-}$
h max	0,9	1,2	1,5	1,85	2,05	2,2	2,6	2,9

Drive-in nuts for wood

S M F 72

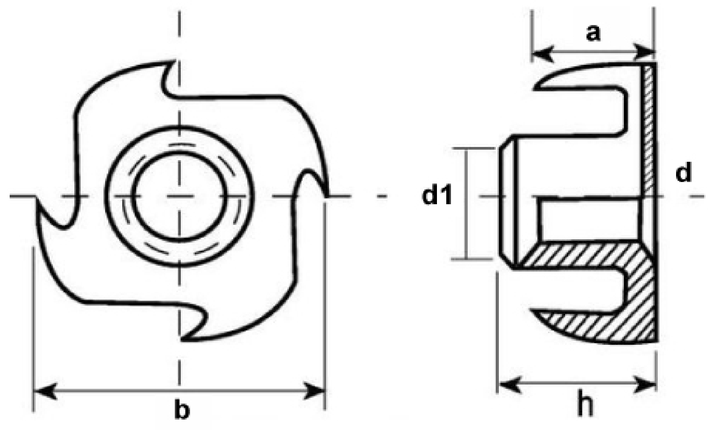

d	M3	M4	M5	M6	M8	M10
P	0,5	0,7	0,8	1	1,25	1,5
d1	4,3	5	6,3	7,3	9,7	11,9
h	5	6	8	9	11	12
a	3,5	4,5	5,5	7	7,5	9
b	13	15	17	19	22	25

Round Coupling Nuts

S M F 73

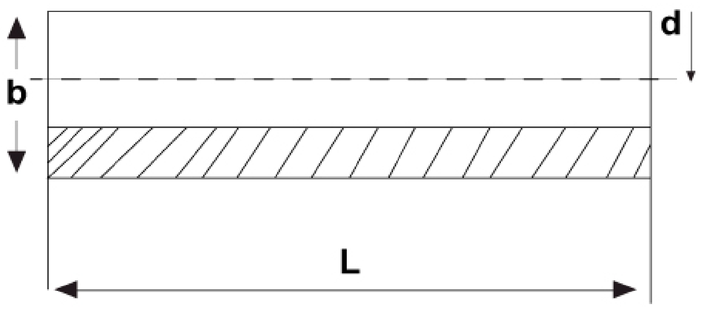

d	M4	M5	M6	M8	M10	M12	M16
P	0,7	0,8	1	1,25	1,5	1,75	2
b	8	8	10	11	13	15	22
L	20	20	30	25/30	30	35	50

Sleeve Anchors - Bolt

S M F 74

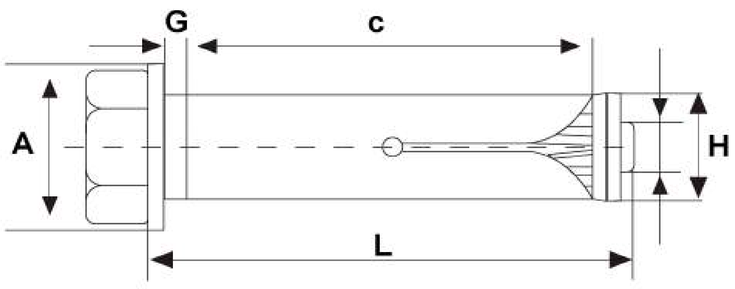

M		M6x45	M6x60	M6x45	M6x60
drill "H"		8	8	9	9
hole depth min		50	60	50	60
max fixture thickness		5	15	5	15
Min substrate thickness		100	100	100	100
Pull out-oad kn		2,32	2,98	2,32	2,98
Shead load kn		2,78	3,43	2,78	3,43
medidas MM: Sizes mm	L	45	60	45	60
	C	30	45	30	45
	G	5	5	5	5
	A	18	18	18	18

Sleeve Anchors - Bolt

S M F 74

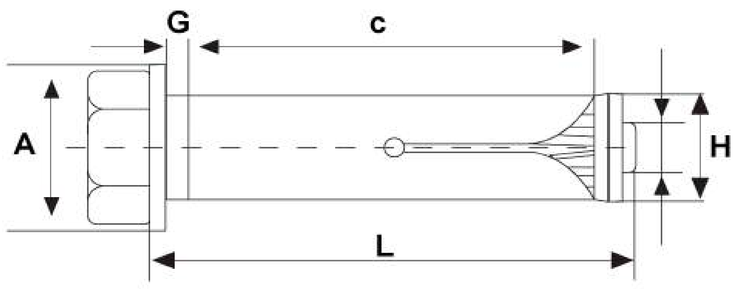

M		M8x60	M8x80	M8x60	M8x80
drill "H"		10	10	11	11
hole depth min		60	80	60	80
max fixture thickness		5	15	5	15
Min substrate thickness		100	105	100	105
Pull out-oad kn		3,64	5,30	3,64	5,30
Shead load kn		4,37	6,29	4,37	6,29
medidas MM: Sizes mm	L	60	80	60	80
	C	40	62	40	62
	G	5	5	5	5
	A	20	20	20	20

M		M10x70	M10x100	M10x70	M10x100
drill "H"		12	12	14	14
hole depth min		75	100	75	100
max fixture thickness		5	25	5	25
Min substrate thickness		100	110	100	110
Pull out-oad kn		4,64	5,79	4,97	5,79
Shead load kn		5,56	6,75	5,95	6,75
medidas MM: Sizes mm	L	70	100	70	100
	C	48	75	50	75
	G	5	5	5	5
	A	23,5	23,5	23,5	23,5

Sleeve Anchors - Bolt

S M F 74

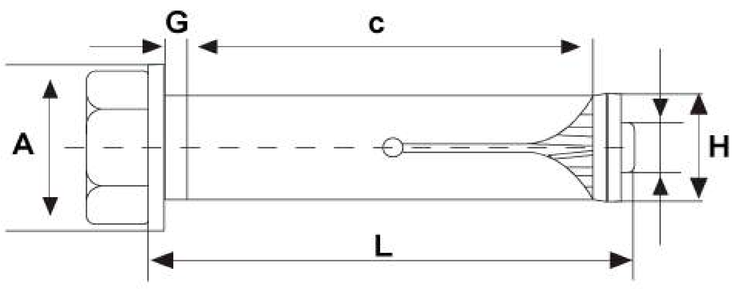

M		M12x80	M12x110	M16x100	M20x130
drill "H"		16	16	20	25
hole depth min		85	110	110	130
max fixture thickness		5	25	15	25
Min substrate thickness		110	135	145	160
Pull out-oad kn		5,79	7,95	8,77	10,26
Shead load kn		6,75	14,46	21,43	24,60
medidas MM: Sizes mm	L	80	55	5	30
	C	110	88	5	30
	G	110	82	5	40
	A	130	105	-	36

Sleeve Anchors - Rod

S M F 75

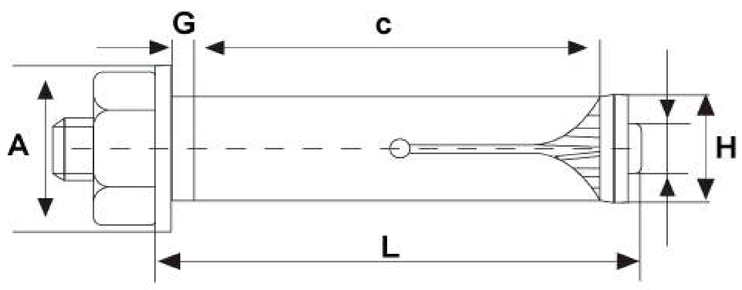

M		M6x45	M6x45	M8x60	M8x80	M8x60
drill "H"		8	9	10	10	11
hole depth min.		50	50	60	80	60
Max fixture thickness		5	5	5	15	5
Min substrate thickness		100	100	100	105	100
Pull out-load Kn		2,32	2,32	3,64	5,30	3,64
Shear Load kn		2,78	2,78	4,37	6,29	4,37
Medidas mm: Sizes mm	L	45	45	60	80	60
	C	30	30	40	62	40
	G	5	5	5	5	5
	A	18	18	20	20	20

M		M8x80	M10x70	M10x100	M10x70	M10x100
drill "H"		11	12	12	14	14
hole depth min.		80	75	100	75	100
Max fixture thickness		15	5	25	5	25
Min substrate thickness		105	100	110	100	110
Pull out-load Kn		5,30	4,64	5,79	4,97	5,79
Shear Load kn		6,29	5,56	6,75	5,95	6,75
Medidas mm: Sizes mm	L	80	70	100	70	100
	C	62	48	75	50	75
	G	5	5	5	5	5
	A	20	23,5	23,5	23,5	23,5

Sleeve Anchors - Open eye bolt

S M F 76

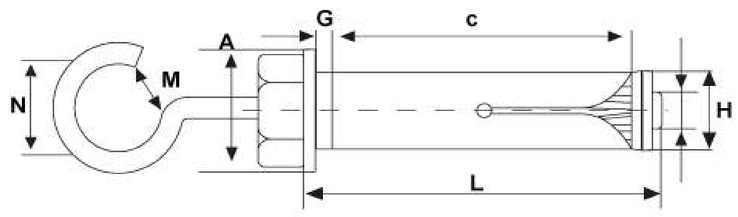

M		M6x45	M6x45	M8x60	M8x60
drill "H"		8	9	10	11
hole depth min.		50	50	60	60
Max fixture thickness		-	-	-	-
Min substrate thickness		100	100	100	100
Pull out-load Kn		0,45	0,45	1,00	1,00
Shear Load kn		-	-	-	-
Medidas mm: Sizes mm	L	55	55	65	65
	C	30	30	40	40
	G	5	5	5	5
	A	18	18	20	20
	M / N	10/20	10/20	12/26	12/26

M		M10x70	M10x70	M12x80
drill "H"		12	14	16
hole depth min.		75	75	80
Max fixture thickness		-	-	-
Min substrate thickness		100	100	110
Pull out-load Kn		1,50	1,50	2,00
Shear Load kn		-	-	-
Medidas mm: Sizes mm	L	80	80	85
	C	48	50	55
	G	5	5	5
	A	23,5	23,5	30
	M / N	14/31	14/31	22/43

Sleeve Anchors - Eye bolt

S M F 77

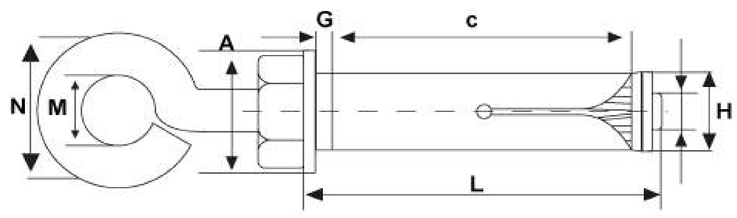

M		M6x45	M6x45	M8x60	M8x60
drill "H"		8	9	10	11
hole depth min.		50	50	60	60
Max fixture thickness		-	-	-	-
Min substrate thickness		100	100	100	100
Pull out-load Kn		0,45	0,45	1,00	1,00
Shear Load kn		0,45	0,45	1,00	1,00
Medidas mm: Sizes mm	L	55	55	65	65
	C	30	30	40	40
	G	5	5	5	5
	A	18	18	20	20
	M / N	10/21	10/21	13/28	13/28

M		M10x70	M10x70	M12x80
drill "H"		12	14	16
hole depth min.		75	75	85
Max fixture thickness		-	-	-
Min substrate thickness		100	100	110
Pull out-load Kn		1,50	1,50	2,00
Shear Load kn		1,50	1,50	2,00
Medidas mm: Sizes mm	L	80	80	85
	C	48	50	55
	G	5	5	5
	A	23,5	23,5	30
	M / N	14/33	14/33	22/44

Highload Anchors - Bolt Type

S M F 78

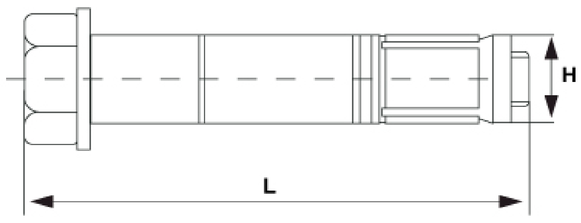

M	M8x100	M8x120	M10x110	M10x130	M12x130	M12x160	M16x150
drill "H"	12	12	15	15	18	18	24
Hole depth Min	90	90	100	100	115	115	140
Max fixture thickness	20	40	20	40	25	50	25
Min substrate thickness	140	140	153	153	178	178	212
Pull out -load Kn	13,95	13,95	16,06	16,06	20,15	20,15	26,16
Shear load Kn	12,55	12,55	27,84	27,84	40,30	40,30	43,68

M	M16x180	M20x160	M20x190	M20x220	M24x210	M24x240
drill "H"	24	28	28	28	32	32
Hole depth Min	140	175	175	175	195	195
Max fixture thickness	55	2	30	60	30	60
Min substrate thickness	212	281	281	281	310	310
Pull out -load Kn	26,16	39,97	39,97	39,97	46,31	46,31
Shear load Kn	43,68	53,38	53,38	53,38	61,57	61,57

Highload Anchors - Stud Type

S M F 79

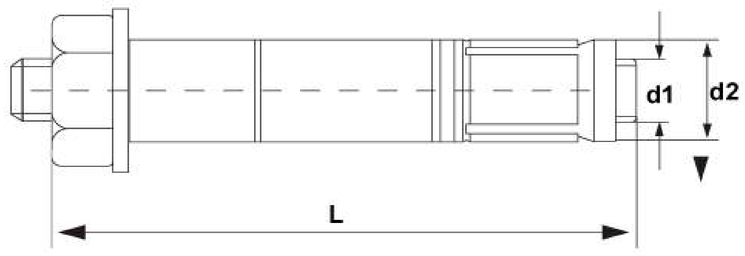

M	M8x100	M8x120	M10x110	M10x130	M12x130	M12x160	M16x150
drill "H"	12	12	15	15	18	18	24
Hole depth Min	90	90	100	100	115	115	140
Max fixture thickness	20	40	20	40	25	50	25
Min substrate thickness	140	140	153	153	178	178	212
Pull out -load Kn	13,95	13,95	16,06	16,06	20,15	20,15	26,16
Shear load Kn	12,55	12,55	27,84	27,84	40,30	40,30	43,68

M	M16x180	M20x160	M20x190	M20x220	M24x210	M24x240
drill "H"	24	28	28	28	32	32
Hole depth Min	140	175	175	175	195	195
Max fixture thickness	55	2	30	60	30	60
Min substrate thickness	212	281	281	281	310	310
Pull out -load Kn	26,16	39,97	39,97	39,97	46,31	46,31
Shear load Kn	43,68	53,38	53,38	53,38	61,57	61,57

Expanding Shells - Bolt Type - Zamak

S M F 80

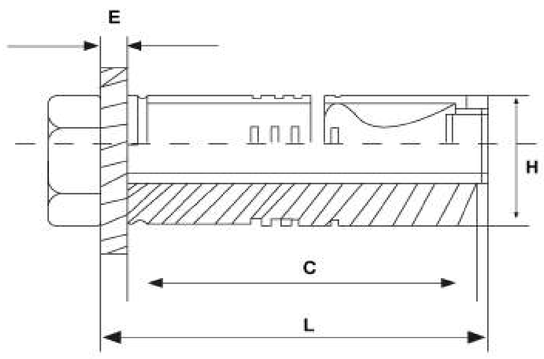

M		M6x50	M8x60	M10x80	M12x100	M16x140
drill "H"		12	14	16	20	25
Hole depth min		60	65	75	90	125
Max fixture thickness "E"		0,5	8	19	25	30
Min substrate thickness		100	100	102	122	192
pull out-load kn		4,40	4,73	6,08	7,97	15,74
shear load kn		3,43	5,67	6,90	14,46	26,91
Medidas mm: Sizes mm	C	41	43	51	61	96
	L	50	60	80	100	140
	LT	-	-	-	-	-
	M	-	-	-	-	-

Expanding Shells - Rod Type - Zamak

S M F 81

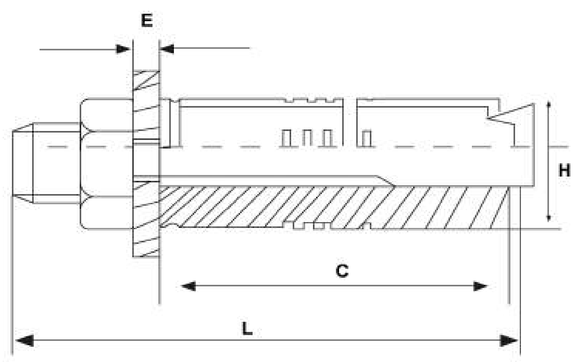

M		M6x60	M8x70	M10x100	M12x120	M16x140
drill "H"		12	14	16	20	25
Hole depth min		60	65	75	90	125
Max fixture thickness "E"		0,5	8	19	25	30
Min substrate thickness		100	100	102	122	192
pull out-load kn		4,40	4,73	6,08	7,97	15,74
shear load kn		2,86	5,67	6,90	12,00	22,40
Medidas mm: Sizes mm	C	41	43	51	61	96
	L	60	70	100	120	140
	LT	-	-	-	-	-
	M	-	-	-	-	-

Expanding shells with Open Eye Bolt - Zamak

S M F 82

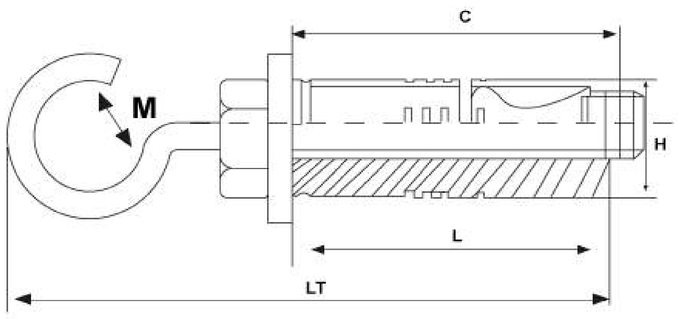

M		M6x45	M8x50	M10x56	M12x70
drill "H"		12	14	16	20
Hole depth min		60	65	75	90
Max fixture thickness "E"		-	-	-	-
Min substrate thickness		100	100	102	122
pull out-load kn		4,40	4,73	6,08	7,97
shear load kn		-	-	-	-
Medidas mm: Sizes mm	C	41	43	51	61
	L	55	65	80	85
	LT	75	100	110	140
	M	7	9	10	15

Expanding shells with Eye Bolt -Zamak

S M F 83

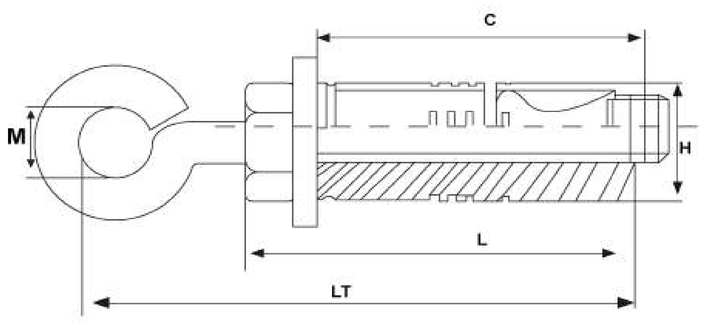

M		M6x45	M8x50	M10x56	M12x70
drill "H"		12	14	16	20
Hole depth min		60	65	75	90
Max fixture thickness "E"		-	-	-	-
Min substrate thickness		100	100	102	122
pull out-load kn		4,40	4,73	6,08	7,97
shear load kn		-	-	-	-
Medidas mm: Sizes mm	C	41	43	51	61
	L	55	65	80	85
	LT	75	100	110	140
	M	10	13	14	22

Expanding Shells - Zamak

S M F 84

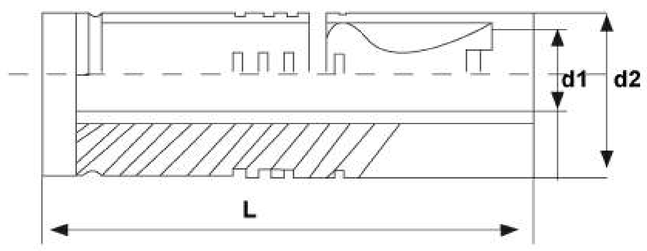

M	M6	M8	M10	M12
L	40	50	60	80
d2 = drill	10	14	16	20
Drill depth min	45	55	65	85

Drop-in Anchor

S M F 85

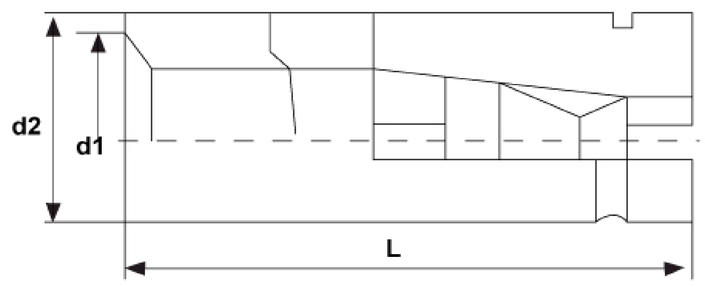

M	M6	M8	M10	M12	M16	M20
drill "H"	8	10	12	15	20	25
Anchor length "L"	25	30	40	50	65	80
Thread Lenght	6-10	8-13	10-17	12-20	16-27	20-34
Hole depth max	36,7	32,3	42,9	53,5	69,6	85,8
Min substrate thickness	100	100	100	100	130	160
minimum depth of anchor	25	30	40	50	65	80
pull out load concrete kn C20	2,09	2,75	4,23	5,92	8,33	9,92
Shear load concrete kn C20	2,13	3,30	3,86	7,10	11,19	16,73

Resin Capsules

S M F 86

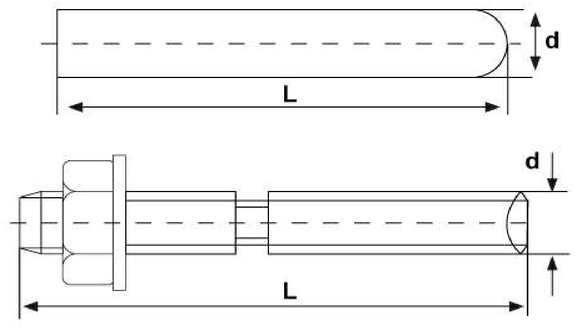

M	8	10	12	16	20	24	30
drill "d"	10	12	14	18	25	28	35
capsule length "L"	80	80	95	95	170	210	265
Hole depth max	80	90	110	125	170	210	280
Max fixture thickness	17	25	32	44	66	62	22
Min Substrate thickness	130	140	160	175	220	260	330
Pull out-load Kn	4	7	10	15	27	37	60
Shear load Kn	4	7	10	15	27	37	60

Wall Plugs - Nylon - Grey colour

S M F 87

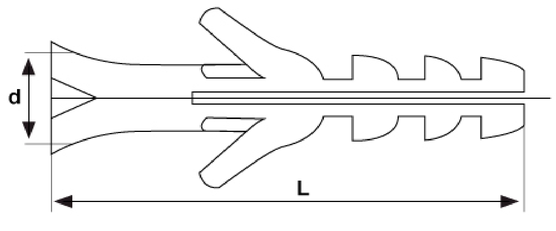

d	4	5	6	7	8	10	12	14
L	20	25	30	37	40	50	60	80
drill	4	5	6	7	8	10	12	14
drill depth	25	35	40	45	55	70	80	100

Sheet Metal Fasteners

Self Clinch Fasteners (For Installation into sheet upto HRB7-0 max)

Nuts

Stud 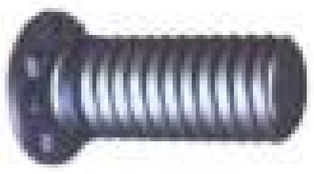

Through Standoff

Blind Standoff

Flush Nuts

Blind Nut

Fresh Nut

Stud for min. Sheet 0,51mm

High Strength Stud

Floating Nut (non locking)

Floating Nut (locking)

Clip On Standoffs

Keyhole Standoffs

Gringing Standoffs

Screwlocks Standoff

PANEL FASTENERS

Slotted Low Profile

Slotted

Recess

Recess

Self Clinch Fasteners (For installation into sheet upto HRB90 max)

Nut

Stud 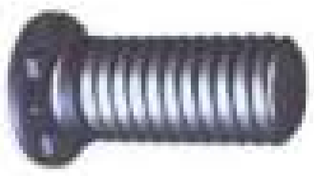

Through Standoff

Blind-Standoff

Self Clinch Fasteners for Blind Holes

Blind (Min. 1.6mm)

Bolt (Min. 1.6mm)

Stanoff (Min. 1.6mm)

Stanoff (Min. 2.4mm)

Rivet Products

Round Serrated Spigot

Round Mini

Hexagonal

Swage Nut

Round Standoff 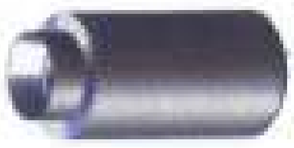

Mini Standoff

Round Serrated Face

Lock Round

Lock Hexagonal

Tank Bush

Self Clinch Fasteners for PC board

Broaching Nuts

Studs

Broaching Standoff

Clip-In Standoffs

SRISHAA
MACHINED FASTENERS PVT.LTD.

Available Standard

ANSI / ISO / IS / SAE / DIN / ASTM / BS / JIS
AS Per Customer Specification

Plating Selection

Types	Salt Spray Test (hrs)
Zinc	24-36
Yellow Zinc	24-36
Black Phosphate	24-36
Grey Phosphate	24-36
Dacromet	500-1000
Ruspert	500-3000
Mechanical Galvanizng	500-1000
Mechanical Galvanizng + Coating	1000-1500
Nanoplating	1500-2000
Tufcode (Ruspert)	1500-2000

Available Finish

Self Colour (Plain) / Zinc(White/Blue/Yellow/Olive Green/Black)
Also available Trivalent Chrome (Cr+3) / ROHS Compliant
Black Oxide/ Nickle / Chrome / Brass / Antique Brass / Antique Bronze/
Copper / Tin / Cadmium / Lead/ Iron Zinc

Hot Dip Galvanized/Mechanical Galvanized/
Phosphate / Dacrodized / Delta Coating / E-Coating / Geomat / Zinc Flake
And
Coating Adhesives / Sealants on Threading Surfaces available /
PTFE

Available Packing

Gunny bags in bulk packing (about 20-25 kgs) / Carton Packing (about 20-25kg)
Poly bags and Plastic box assortment as per Customer Request.

Secondary Operations

For fasteners which require additional processes we are able to provide a wide range of facilities such as :

- Auto lathe & CNC Machinings
- Chamferring
- Shank & Head Slotting
- Centerless Grinding

Available Material :

- Low Carbon Steel
- High Carbon Steel / Boron Steel / Alloy Steel
- Stainless Steel
- Aluminum
- Brass
- Silicon Bronze
- Copper
- Exotic Metals
- Zinc Alloy Die - Casting
- Nylon (Polyamide)
- PVC
- 904 L
- Duplex
- Super Duplex
- Inconel
- Monel
- Haste Alloy
- Titanium
- Alloy 20

While sending your enquiry, kindly provide us with the following details to enable us to be more efficient in our service to you.

1. Description
2. Standard
3. Material
4. Size (Nominal Dia, Length, Head Style, Point Style....etc)
5. Surface Treatment and Heat Treatment
6. Quantity
7. Delivery Requirement (Freight / Tranportation)
8. Packing Requirement if any
9. Special Requirement if any
10. Drawing (If non standard Screw) / Sample

Chemical Compositon

AISI ASTM	ENDIN	C % Max	Min % Max	Si Max	S % Max	P % Max	Cr % Max	Ni % Max	Mo % Max	Others %
201		0.15	8Min	1	0.03	0.07	12 Min	0.50 Min		Cu 1-1.5
202		0.15	7.5-10	1	0.03	0.06	17.00-19.00	4.00-6.00		
302	1.431	0.15	2	1	0.03	0.045	17.00-19.01	8.00-10.00		Cu : 3.00-4.00
302HQ	1.4567	0.03	2	1	0.03	0.045	17.00-19.02	9.00-10.00		Cu : 1% max
303	1.,4305	0.15	2	1	0.15 Min	0.2	17.00-19.03	8.00-10.00		Cu : 1% max
303EHS		0.15	2	1	0.30-0.33	0.2	17.00-19.04	8.00-10.00		
304	1.4301	0.08	2	1	0.03	0.045	18.00-20.00	8.00-11.00		Cu : 2.00-2.50
304HC		0.05	2	1	0.03	0.045	18.00-20.00	8.50-9.50		
304L	1.4307	0.03	2	1	0.03	0.045	18.00-20.00	8.00-12.00		
308LER	1.4331	0.02	1.5-2.0	0.5	0.02	0.025	19.00-21.00	9.50-11.00		
309LER	1.4332	0.03	1.5-2.0	0.5	0.015	0.02	23.00-26.00	12.00-14.00		
310	1.4841	0.25	2	1.5	0.03	0.045	24.00-26.00	19.00-22.00		
310S	1.4842	0.08	2	1.5	0.03	0.045	24.00-26.00	19.00-22.00		
316	1.4401	0.08	2	1	0.03	0.045	16.00-18.00	10.00-14.00	2.00-3.00	
316L	1.4404	0.03	2	1	0.03	0.045	16.00-18.00	10.00-14.00	2.00-3.00	
316LER	1.443	0.02	1.5-2.0	0.5	0.03	0.02	18.00-20.22	12.00-14.00	2.00-2.75	
316TI	1.4571	0.08	2	1	0.03	0.045	16.00-18.00	10.00-14.00	2.00-3.00	Ti : MIn(5xC%)
317LN	1.4438	0.03	2	1	0.03	0.045	18.00-20.00	11.00-15.00	3.00-4.00	N: 0.010-0.22
321	1.4541	0.08	2	1	0.03	0.045	17.00-19.00	9.00-12.00		Ti : Min(5xc%)
410	1.4006	0.15	1	1	0.03	0.004	11.50-13.50			
416	1.4005	0.15	1.25	1	0.15 Min	0.06	12.00-14.00			
416XM		0.15	1.25	1	0.30-0.03	0.06	12.00-14.00			
420	1.4021	0.15Min	1	1	0.03	0.04	12.00-14.00			
430	1.4016	0.12	1	1	0.03	0.04	16.00-18.00			
430L		0.03	1	1	0.03	0.04	16.00-18.00			
430F	1.4104	0.12	1.25	1	0.15 Min	0.06	16.00-18.00			
431	1.4057	0.2	1	1	0.03	0.04	15.00-17.00	1.25-2.50		

Chemical Properties ISO 898-1 : 2009

Property class	Material and Heat Treatment	Chemical Composition Limits (cast analyaia, %) [a]					Tempering temperature ^{0}C min
		C min	C max	P max	S max	B [b] max	
4.6 [c,d]	Carbon Steel or Carbon Steel with Additives	-	0,55	0,050	0,060	Not Specified	-
4.8 [d]							
5.6 [c]		0,13	0,55	0,050	0,060		
5.8[d]		-	0,55	0,050	0,060		
6.8 [d]		0,15	0,55	0,050	0,060		
8.8 [c,d]	Carbon Steel with Additives (eg.Boron or Mn or Cr) Quenched and Tempered **OR**	0,15[e]	0,40	0,025	0,025	0,003	425
	Carbon Steel Quenched and Tempered **OR**	0,25	0,55	0,025	0,025		
	Alloy Steel Quenched and Tempered [g]	0,20	0,55	0,025	0,025		
9.8 [f]	Carbon Steel with Additives (eg. Boron or Mn or Cr) Quenched and Tempered **OR**	0,15[e]	0,40	0,025	0,025	0,003	425
	Carbon Steel Quenched and Tempered **OR**	0,25	0,55	0,025	0,025		
	Alloy Steel Quenched and Tempered [g]	0,20	0,55	0,025	0,025		
10.9 [f]	Carbon Steel with Additives (eg. Boron or Mn or Cr) Quenched and Tempered **OR**	0,20[e]	0,55	0,025	0,025	0,003	425
	Carbon Steel Quenched and Tempered **OR**	0,25	0,55	0,025	0,025		
	Alloy Steel Quenched and Tempered [g]	0,20	0,55	0,025	0,025		
12.9 [f,h,i]	Alloy Steel Quenched and Tempered [g]	0,30	0,50	0,025	0,025	0,003	425
12.9 [f,h,i]	Carbon Steel with Additives (eg. Boron or Mn or Cr or Molybdenum) Quenched and Tempered	0,28	0,50	0,025	0,025	0,003	380

a. In case of dispute, the product analysis applies.

b. Boron content can reach 0,005% provided that non-effective boron is controlled by addition of titanium and / or aluminium.

c. For cold forged fasteners of property classes 4.6 and 5.6, heat treatment of the wire used for cold forging or of the cold forged fastener itself may be necessary to achieve required ductility.

d. Free cutting steel is allowed for these property classes with the following maximum sulphur, phosphorus and lead contents : Sulphur 0,34%; Phosphorus 0,11%; Lead 0,35%.

e. In case of plain carbon boron steel with carbon content below 0,25% (Cast Analysis), the minimum manganese content shall be 0.6% for property class 8.8 and 0,7% for 9.8 and 10.9.

f. For materials of these property classes, there shall be a sufficient hardenability to ensure a structure consisting of approximately 90% martensite in the core of the threaded sections for the fasteners in the "as -hardened" condition before tempering.

g. This alloy steel shall contain at least one of the following elements in the minimum quantity given : Chromium 0,30%, Nickel 0,30%, Molybdenum 0,20%, Vanadium 0,10%. Where elements are specified in combinations of two, three or four and have alloy contents less than those given above, the limit value to be applied for steel class determination is 70% of the sum of the individual limit values shown above for the two three or four elements concerned.

h. A metallographically detectable white phosphorus enriched layer is not permited for property class 12.9 / 12.9 . It shall be detected by a suitable test method.

i. Caution is advised when the use of property class 12.9 / 12.9 is considered. The capapbility of fasteners manufacturer, the service conditions and the wrenching methods should be considerd. Enviroments may cause stress corrosion cracking of fasteners as processed as well as those coated.

Poperty of Bolts. ISO 898-1: 2009

No.	Mechnical or physical Property		Property Class									
			4.6	4.8	5.6	5.8	6.8	8.8		9.8	10.9	12.9 / 12.9
								d ≤ 16 mm[a]	d > 16 mm[b]	d ≤ 16 mm		
1	Tensile strength, Rm, MPa	nom.[c]	400		500		600	800		900	1000	1200
		min,	400	420	500	520	600	800	830	900	1040	1220
2	Lower yeild strength, ReL [d], MPa	nom.[c]	240	-	300	-	-	-	-	-	-	-
		min,	240	-	300	-	-	-	-	-	-	-
3	Stress at 0,2% non-proportional elongation, Rp0, MPa	nom.[c]	-	-	-	-	-	640	640	720	900	1080
		min,	-	-	-	-	-	640	660	720	940	1100
4	Stress at 0,0048 d non-proportional elongation for full-size fasteners, Rpf, MPa	nom.[c]	-	320	-	400	480	-	-	-	-	-
		min,	-	340[e]	-	420[e]	480[e]	-	-	-	-	-
5	Stress under proof load, Sp [f], MPa	nom.	225	310	280	380	440	580	600	650	830	970
	Sp,nom /ReL min **OR** **Proof strength ratio** Sp,nom /Rp0,2min **OR** Sp,nom /Rpfmin		0,94	0,91	0,93	0,90	0,92	0,91	0,91	0,90	0,88	0,88
6	Percentage elongation after fracture for machined test pieces, A, %	min.	22	-	20	-	-	12	12	10	9	8
7	Percentage reduction of area after fracture for machined test pieces, Z, %	min	-					52		48	48	44
8	Elongation after fracture for full-size fasteners, Af (see also Annex C)	min	-	0,24	-	0,22	0,20	-	-	-	-	-
9	Head Soundness	No Fracture										
10	Vickers hardness, HV F ≥ 98 N	min	120	130	155	160	190	250	255	290	320	385
		max	220[g]				250	320	335	360	380	435
11	Brinell hardness, HBW, F = 30 D^2	min	114	124	147	152	181	238	242	276	304	366
		max	220[g]				238	304	318	342	361	414
12	Rockwell Hardness, HRB	min	67	71	79	82	89	-				
		max	95,0				99,5	-				
	Rockwell Hardness, HRC	min	-					22	23	28	32	39
		max	-					32	34	37	39	44
13	Surface Hardness, HV 0,3	max	-					h			h,i	h,j

Poperty of Bolts. ISO 898-1: 2009

No.	Mechnical or physical Property		Property Class							
14	Height of non-decarburized thread zone E,mm	min.	-			1/2H1		2/3H1		3/4H2
	Depth of complete decarburization in the thread, G, mm	max.	-			0,015				
15	Reduction of hardness after retempering, HV	max.	-			20				
16	Breaking rorque, MB, N.M	min.	-			in accordance with ISO 898-7				
17	impact strength, Kv [k,l,J]	min.	-	27	-	27	27	27	27	m
18	Surface integrity in accordance with .		ISO 6157-1[n]							ISO 6157-3

Poperty of Bolts. ISO 898-1: 2009

a. Values do not apply for structural bolting.

b. For structural bolting ≥ M12

c. Nominal values are specified only for the purpose of the designation system for property classes . See Clause 5.

d. In cases where the lower yeild strenght ReL cannot be determined, it is permissible to measure the stress at 0,2 % non-proportional elongation $Rp_{0,2}$.

e. For the property classes 4.8, 5.8 and 6.8 the values for Rpf min are under investigation. The present values are given for calculation of the proof stress ratio only. They are not test values.

f. Proof loads are specified in Tables 5 and 7.

g. Hardness determined at the end of a fasteners shall be 250 HV, 238 HB or 99,5 HRB maximum.

h. Surface hardness shall not be more than 30 Vickers points above the measured core hardness of the fastener when determination of both surface hardness and core hardness are carried out with HV 0,3.

i. Any increase in hardness at the surface with indicates that the surface hardness exceeds 390 HV is not acceptable.

j. Any increase in hardness at the surface which indicates that the surface hardness exceeds 435 HV is not acceptable

k. Values are determined at a test temperature of -20 degree C, see 9.14.

i. Applies to ≥ 16 mm.

m. Value for Kv is under investigation.

n. Instead of ISO 6157-1, ISO 6157-3 may apply by agreement between the manufacture and the purchaser.

Mechanical Properties DIN 267-4 for nuts DIN 934

Mechanical Propertiess	Hardness Type					
	11 H			14 H	17 H	22 H
	4	5	6	8	10	12
Proof load stress Sp N/mm^2	400	500	600	800	1000	2000
Vickers hardness ...HV 5 max.	302	302	302	302	353	353
Brinel Hardness ... HB 30 max.	290	290	290	290	335	335
Rockwll hardness...HRC max.	30	30	30	30	36	36

Chemical Composition EN 20898-2: 1992 - ISO 898 - 2: 1992

Property Symbol (Class of nuts)	Chemical Composition in % by msas (check analysis) 1*			
	C max.	Mn min	P max	S max.
11 H (4,5 and 6)	0,5	-	0,06	0,15
14 H (8)	0,58	0,25	0,06	0,15
17 H (10)	0,58	0,3	0,048	0,058
22 H (12)	0,58	0,45	0,048	0,058

1 * Chips for the check analysis shall be taken uniformly over the whole cross section

1)NQT: Not quenched or tempered. 2)QT: Quenched and tempered. 3) The maximum bolt the hardness of property classes 5.6 and 5.8 will be changed to be 220 HC in the next revision of ISO 898-1:1998. This is the maximum bolt hardness in the thread engagement area whereas only the thread end or the head may have a mamimum hardness of 250 HV. Therefore the values of stress under proof load are based on a maximum bolt hardness of 220 HV. Note: Minimum hardness is mandatory only for heat-treated nuts and nuts too large to be proof-load tested. For all other nuts, minimum hardness is not mandatory but is provided for guidance only. For nuts which are not hardened and tempered, and which satisfy the proof-load test, minimum hardness shall not be cause for rejection.

Mechanical Properties EN 20898-2: 1992

Property class	Thread		Stress under proof load Sp	Vickers Hardness HV		Nut	
	greater than	less than or equal to	N / mm^2	min	max	state	style
04	-	M4	380	188	302	NQT1)	thin
	M4	M7					
	M7	M10					
	M10	M16					
	M16	M39					
05	-	M4	500	272	353	QT2)	thin
	M4	M7					
	M7	M10					
	M10	M16					
	M16	M39					
4	-	M4					
	M4	M7					
	M7	M10					
	M10	M16					
	M16	M39	510	117	302	NQT1)	1
5[3)]	-	M4	520	130	302	NQT1)	1
	M4	M7	580				
	M7	M10	580				
	M10	M16	610				
	M16	M39	630	146			
6	-	M4	600	150	302	NQT1)	1
	M4	M7	670				
	M7	M10	680				
	M10	M16	700				
	M16	M39	720	170			
8	-	M4	800	180	302	NQT1)	1
	M4	M7	855	200			
	M7	M10	870				
	M10	M16	880				
	M16	M39	920 890	233 180	353 302	NQT2) NQT1)	1 2
9	-	M4	900	170	302	NQT1)	2
	M4	M7	915	188			
	M7	M10	940				
	M10	M16	950				
	M16	M39	920				
10	-	M4	1040	272	353	QT2)	1
	M4	M7	1040				
	M7	M10	1040				
	M10	M16	1050				
	M16	M39	1060				
12	-	M4	1140 1150	295	353	QT2)	1
	M4	M7	1140 1150				
	M7	M10	1140 1160	272	353	QT2)	2
	M10	M16	1170 1190				
	M16	M39	- 1200				

Proof loads for DIN 934 hot-dip galvanized nuts with oversize thread. Din 267-10

Thread	Pitch Size	Stress area	Property class bolt / nut			
			4	5	8	10
	P	As min in mm2	Minimum failure load of bolt or proof load for nut (As min * Rm) N			
M6	1	16,4	6.560	8.200	13.100	17.100
M8	1,25	31,3	12.500	15.700	25.000	32.600
M10	1,5	50,9	20.400	25.500	40.700	52.900
M12	1,75	75,1	30.000	37.600	60.100	78.100
M14	2	104	41.600	52.000	83.200	108.000
M16	2	144	57.600	72.000	115.000	150.000
M18	2,5	177	70.800	88.500	147.000	184.000
M20	2,5	227	90.800	114.000	188.000	236.000
M22	2,5	284	114.000	142.000	236.000	295.000
M24	3	329	132.000	165.000	273.000	342.000
M27	3	433	173.000	216.000	359.000	450.000
M30	3,5	530	212.000	265.000	440.000	551.000
M33	3,5	659	264.000	330.000	547.000	685.000
M36	4	777	311.000	389.000	645.000	808.000

Assembly pre-load and tightening torque of bolts and nuts

Yeild strength (PO), Assembly pre-load (Pv) and tightening torques (Ma) for metric thread bolts as per Din 13 page 43 and dimensions of head as Din 912, 931, 934. Average friction coefficient μ =0,14.

Nominal diameter	Pitch	Section resistent	Section nucleus	Yeild strength load P0,2 (Kp) over resistent section				Assembly pre-load Pu(Kp) (70-75 % of maximum load)				Tightening torque Ma (m.Kp) friction coefficient s=0,14			
		mm2	mm2	5.6	8.8	10.9	12.9	5.6	8.8	10.9	12.9	5.6	8.8	10.9	12.9
M4	0,70	8,78	7,75	260	560	790	950	195	390	545	655	0,15	0,29	0,41	0,49
M5	0,80	14,20	12,70	420	910	1.280	1.530	320	635	895	1.070	0,30	0,60	0,85	1,00
M6	1,00	20,10	17,90	600	1.290	1.810	2.170	425	900	1.260	1.510	0,50	1,00	1,40	1,70
M8	1,25	36,60	32,80	1.090	2.340	3.290	3.950	820	1.650	2.320	2.790	1,25	2,50	3,50	4,10
M10	1,50	58,00	52,30	1.740	3.710	5.200	6.250	1.310	2.620	3.690	4.430	2,45	4,90	6,90	8,30
M12	1,75	84,30	76,20	2.530	5.400	7.600	9.100	1.900	3.830	5.400	6.450	4,20	8,60	12,00	14,50
M14	2,00	115,00	105,00	3.450	7.350	10.350	12.400	2.600	53250	7.400	8.850	6,80	13,50	19,00	23,00
M16	2,00	157,00	144,00	4.710	10.000	14.100	17.000	3.550	7.300	10.200	12.300	10,50	21,00	29,50	35,00
M18	2,50	192,00	175,00	5.760	12.300	17.300	20.700	4.320	8.800	12.400	14.800	14,50	29,00	40,50	48,50
M20	2,50	245,00	225,00	7.350	15.700	22.000	26.500	5.500	11.400	16.000	19.200	20,00	41,00	58,00	69,00
M22	2,50	303,00	282,00	9.090	19.400	27.300	32.700	6.800	14.100	19.900	23.900	26,50	55,00	78,00	93,00
M24	3,00	353,00	324,00	10.590	22.600	31.800	38.100	7.900	16.400	23.000	27.600	34,50	71,00	100,00	120,00
M27	3,00	459,00	427,00	13.770	29.400	41.300	49.600	10.300	21.500	30.200	36.300	51,00	105,00	150,00	180,00
M30	3,50	561,00	519 00	35.830	35.900	50.500	60.600	12.600	28.200	36.800	44.200	68,00	145,00	200,00	240,00

Assembly pre-load and tightening torque of bolts and nuts

Yeild strength (PO), Assembly pre-load (Pv) and tightening torques (Ma) for metric thread bolts as per Din 13 page 43 and dimensions of head as Din 912, 931, 934. Average friction coefficient μ =0,14.

Nominal diameter	Pitch	Section resistent	Section nucleus	Yeild strength load P0,2 (Kp) over resistent section				Assembly pre-load Pu(Kp) (70-75 % of maximum load)				Tightening torque Ma (m.Kp) friction coefficient s=0,14			
M8	1,00	39,20	36,00	1.180	2.510	3.530	4.230	890	1.810	2.550	3.060	1,30	2,70	3,80	4,50
M10	1,25	61,20	56,30	1.840	3.920	5.500	6.600	1.380	2.830	3.980	4.770	2,60	5,20	7,30	8,80
M12	1,25	92,10	86,00	2.760	5.900	8.300	9.950	2.070	4.330	6.100	7.300	4,60	9,50	13,50	16,00
M12	1,50	88,10	81,10	2.640	5.650	7.950	9.500	1.980	4.070	5.700	6.850	4,40	9,00	12,50	15,00
M14	1,50	125,00	116,00	3.750	8.00	11.250	13.500	2.800	5.850	8.250	9.900	7,30	15,00	21,00	25,00
M16	1,50	167,00	157,00	5.010	10.700	15.00	18.000	3.750	7.900	11.100	13.30	10,50	22,50	31,50	38,00
M18	1,50	216,00	205,00	6.480	13.800	19.500	23.300	4.850	10.300	14.500	17.400	15,50	32,50	46,00	55,00
M20	1,50	272,00	259,00	8.160	17.400	24.500	29.400	6.100	13.000	18.300	22.000	21,50	46,00	64,00	77,00
M22	1,50	333,00	319,00	9.990	21.300	30.00	36.000	7.500	16.100	22.600	27.100	28,50	61,00	86,00	105,00
M24	2,00	384,00	365,00	11.520	24.600	34.600	41.500	8.600	18.300	25.700	30.900	36,00	78,00	110,00	130,00
M27	2,00	496,00	473,00	14.880	31.700	44.600	53.600	11.200	23.800	33.500	40.200	54,00	115,00	160,00	195,00
M30	2,00	621,00	596,00	18.630	39.700	55.900	67.100	14.300	30.000	42.200	50.600	76,00	160,00	225,00	270,00

Chemical composition of austenitic steel (A). ISO 3506

Stainless steel		Chemical composition in % 1 *							
AISI Type	Steel grade	C	Si	Mn	P	S	Cr	Mo	Ni
AISI 304	A2	0,08	1,0	2,0	0,05	0,03	17,0-20,0	-	8,0-13,0
AISI 316	A4	0,08	1,0	2,0	0,05	0,03	16,0-18,5	2,0-3,0	10,0-14,0

1 * Maximum values, unless otherwise specified.
Sulphur may be replaced by selenium.
May contain titanium 5xC up to 0,8%.
May contain niobium (columbium) and / or tantalum 10xC upto 1%.
Containing titanium 5xC upto 4%.
Molybdenum may also be present at the option of the manufacturer.
If for some applications a maximum molybdenum content in essential , this shall be stated at the time the customer orders.

Mechanical properties of bolts and nuts . ISO 3506

Steel gade	Property class	For sizes d	Bolts and Screws			Nuts
			Tensile strength Rm N/mm2, min. (1*)	0.2% proof stress Rp 0,2 N/mm2,min. (1*)	Elongation at fracture AL in mm, min. (2*)	Proof load stress Sp N/mm2
A2	50	≤M39	500	210	0,6d	500
A4	70	≤M20	700	450	0,4d	700

1 * All values are calculated and reported in terms of the tensile stress area of the thread (see Tables of screw thread elsewhere in this section).

2* The elongation at fracture shall be determined on the actual screw of bolt length 3 x d and not on a prepared test piece of gauge length 5d.

Studbolts and Threaded rods

Main Chemical Elements									Corresponding Materials			
Norm	Grade	C	Mn	Cr	Ni	Mo	V	Ti	AISI	AFNOR	DIN	BS
Ferrific Steel												
ASTMA193	B7	0,37-0,49	0,65-1,10	0,75-1,20	-	0,15-0,25	-	-	4140/4142/ 4145	42CD4	42CrMo4	1506-621 GrA
ASTMA193	B16	0,36-0,47	0,45-0,70	0,80-1,15	-	0,50-0,65	0,25-0,35	-	-	40CDV4-06	24CrMoV55	1506-661
ASTMA320	L7	0,38-0,48	0,75-1,00	0,80-1,10	-	0,15-0,25	-	-	4142/4145	42CD4	42CD4	1506-621 GrA
Austenetic Stainless Steel												
ASTMA193	B8	max. 0,08	max. 2,00	18,0-20,0	8,0-10,5	-	-	-	304	Z6CN18-09	X5CrNi18-19	1506-801GrB
ASTMA193	B8M	max. 0,08	max 2,00	16,0-18,0	10,0-14,0	2,0-3,0	-	-	316	Z6CND17-11	X5CrNi-Mo18-10	1506-845
ASTMA320	B8T	max.0,08	max 2,00	17,0-19,0	9,0-12,0	-	-	min. 5xC%	321	Z6CNT18-11	X10CrNi-Ti18-09	1506-821GrTi

Mechanical Properties						
Norm	Grade	Tensile Strengt N/ mm^2	0,2% yeildstrength N/mm^2	Elongation min %	Reduction of area min %	Hardness HB
Ferrific Steel						
ASTMA193	B7	860	720	16	50	max.321
ASTMA193	B16	860	725	18	50	max.321
ASTMA320	L7	860	725	16	50	-
Austenetic Stainless Steel						
ASTMA193	B8	515	205	30	50	max.223
ASTMA193	B8M	515	205	30	50	max.223
ASTMA320	B8t	515	205	30	50	max.223

Heavy hex nuts

Main Chemical elements and hardness									Corresponding Materials			
Norm	Grade	C	Mn	Cr	Ni	Mo	Ti	Hardness HB	AISI	AFNOR	DIN	BS
Ferrific Steel												
ASTM A194	2H	min. 0,04	max 1,00	-	-	-	-	248-352	-	C45d	C45	1506-162
ASTM A194	4	0,40-0,50	0,70-0,90	-	-	0,20-0,30	-	248-352	-	-	24CrMo5	1506-240
ASTM A194	7	0,37-0,49	0,65-1,10	0,75-1,20	-	0,15-0,25	-	248-352	4140/4142/4145	42CD4	42CrMo4	1506-621 GrA
Austenetic Stainless Steel												
ASTM A194	8	max. 0,08	max 2,00	18,0-20,0	8,0-10,5	-	-	126-300	304	Z6CN18-09	X5CrNi 18-09	1506-801 GrB
ASTM A194	8M	max. 0,08	max 2,00	16,0-18,0	10,0-14,0	2,0-3,0	-	max.223	316	Z6CND 17-11	X5CrNi-Mo18-10	1506-845
ASTM A194	8T	max. 0,08	max 2,00	17,0-19,0	9,0-12,0	-	min.5xC%	126-300	321	Z6CNT 18-11	X10CrNi-Ti18-09	1506-821 GrTi

Core holes for tapping screws and bolts with tapping screws threads. DIN 7970.

Thread of tapping screws as per DIN 7970		Sheet Thickness		Sheet			
				Turned		Drilled	
a nominal	ISO number	min	max	Sheets of steel nickel, brass	Aluminium sheets copper and Monel	Sheets of steel,nickel brass, copper and Monel	Aluminium sheets
2,2	N^{0} 2	-	0,56	-	-	1,6	-
		0,56	0,75	-	-	1,7	1,6
		0,75	0,88	-	-	1,8	1,6
		0,88	1,13	-	-	1,85	1,6
		1,13	1,38	-	-	1,9	1,7
		1,38	1,5	-	-	2,2	1,8
2,9	N^{0} 4	-	0,56	2,2	-	2,2	-
		0,56	0,63	2,5	2,2	2,25	-
		0,63	0,75	2,5	2,2	2,25	2,2
		0,75	0,88	2,5	2,2	2,4	2,2
		0,88	1,25	-	2,2	2,4	2,2
		1,25	1,38	-	-	2,4	2,2
		1,38	1,75	-	-	2,5	2,25
		1,75	2,5	-	-	2,6	2,4
3,5	N^{0} 6	-	0,56	2,8	-	2,6	-
		0,56	0,75	2,8	2,8	2,7	-
		0,75	0,88	2,8	2,8	2,7	2,65
		1	1,25	-	2,8	2,8	2,65
		1,25	1,38	-	-	2,8	2,65
		1,38	1,75	-	-	2,9	2,75
		1,75	2,5	-	-	3	2,85
		2,5	3	-	-	3,2	3
		3	6	-	-	-	3
4,2	N^{0} 7	-	0,5	3	-	2,95	-
		0,5	0,63	3	3	2,95	-
		0,63	0,88	3	3	2,95	2,9
		0,88	1,13	3	3	2,95	2,95
		1,13	1,25	3	3	3	2,95
		1,25	1,38	-	-	3	2,95
		1,38	1,75	-	-	3,2	3
		1,75	2	-	-	3,2	3,5
		2	2,5	-	-	3,5	3,5
		2,5	3,5	-	-	3,6	3,5

Core holes for tapping screws and bolts with tapping screws threads. DIN 7970.

Thread of tapping screws as per DIN 7970		Sheet Thickness		Sheet			
				Turned		Drilled	
a nominal	ISO number	min	max	Sheets of steel nickel, brass	Aluminium sheets copper and Monel	Sheets of steel,nickel brass, copper and Monel	Aluminium sheets
4,2	N⁰ 8	-	0,5	3,5	-	-	-
		0,5	0,63	3,5	3,5	3,2	2,95
		0,63	0,88	3,5	3,5	3,2	3
		0,88	1,13	3,5	3,5	3,2	3,2
		1,13	1,38	3,5	3,5	3,3	3,5
		1,38	2,5	-	-	3,5	3,7
		2,5	3	-	-	3,8	3,8
		3	3,5	-	-	3,9	3,9
		3,5	10	-	-	-	-
4,8	N⁰ 10	-	0,5	4	-	-	-
		0,5	0,75	4	4	3,7	3,7
		0,75	1,13	4	4	3,7	3,7
		1,13	1,38	4	4	3,9	3,7
		1,38	1,75	-	-	3,9	3,8
		1,75	2,5	-	-	4	3,8
		2,5	3	-	-	4,1	3,9
		3	3,5	-	-	4,3	3,9
		3,5	4	-	-	4,4	4
		4	4,75	-	-	4,4	4,2
		4,75	10	-	-	-	-
5,5	N⁰ 12	-	1,13	4,7	-	4,2	-
		1,13	1,38	4,7	-	4,3	4,1
		1,38	1,5	-	-	4,3	4,1
		1,5	1,75	-	-	4,5	4,2
		1,75	2,25	-	-	4,6	4,4
		2,25	3	-	-	4,7	4,6
		3	3,5	-	-	5	4,6
		3,5	4	-	-	5	4,8
		4	4,75	-	-	5,1	4,8
		4,75	10	-	-	-	4,9

Core holes for tapping screws and bolts with tapping screws threads. DIN 7970.

Thread of tapping screws as per DIN 7970		Sheet Thickness		Sheet			
				Turned		Drilled	
a nominal	ISO number	min	max	Sheets of steel nickel, brass	Aluminium sheets copper and Monel	Sheets of steel,nickel brass, copper and Monel	Aluminium sheets
6,3	N^{0} 14	-	1,38	5,3	-	4,9	-
		1,38	1,75	-	-	5	5
		1,75	2	-	-	5,2	5
		2	3	-	-	5,3	5,2
		3	4	-	-	5,8	5,3
		4	4,75	-	-	5,9	5,4
		4,75	5	-	-	-	5,6
		5	10	-	-	-	5,8

Zinc Coating

Metal Coating	Pasivated 1*	Method	Micrage U	Hours Corrosion (h.C.N.S)	
				White Corrosion	Red Corrosion
Zinc	White	Electrolysis 2*	6	6	72
	Black			24	96
	Yellow			72	144
	Green Olive			120	240
	Hot Diped Galvanised			-	400
Zinc- Aluminium	Dacromet A			-	600
	Dacromet B			-	1000

Note: The values of this table are only indicative and can change substantially depending on the type of bolt and its application.

1* Resistance against corrosion can be improved with supplementary top coatings such asd sealers (Ultra GL, JS 500) capable to withstand a 120° C termic shock and lubricants (Torques-Tension, Mervin, etc) that help to obtain lower friction coefficients (0,08-0,14)

2* Hydrogen embrittlement: One of the problems raising from electrolytic coatings is that during its production process molecules of hydrogen produced during the electrolytic process do initially remain on the surface of the items and then do penetrate into the nucleus of the items weakening them. The risk of hydrogen embrittlement increases with the percentage of carbon content of the steel. Therefore fasteners and washers made from hardened steel shall be backed after electroplating during 2-6 hours at a temperature near 300°C. Such procedure eliminates the hydrogen accumulated on the surface of the items.

For more information check the ISO Standard 4042:1999

Tables . ISU (International System of Units) and conversion factors.

Name	newton	joule	bar	kelvin	meter	second	kilo	voltio	amperio	watt
Symbol	N	J	bar	K	m	s	kg	V	A	W

Length		**Area**	
1mm = 0,3937 inches	1 inch = 25,40 mm	1 mm^2 = 0,00266 sq.inches	sq . inches = 6645,16 mm^2
1m = 3,2808 feet	1 foot = 0,3048 m	1 m^2 = 10,764 sq.feet	sq . feet = 0,0929 m^2
1m = 1,0936 yards	1 yard = 0,9144 m	1 m^2 = 1,196 sq . yards	sq . yards = 0,836 m^2
1km = 0,6214 miles	1 mile = 1,609 km	1 km^2 = 0,3861 sq.miles	sq . miles = 2,5889 km^2

Volume		**Mass**	
1 mm^3 = 6,10234x10-5 $inches^3$	1 $inches^3$ = 1,6387x104 mm^3	1 gr. = 0,035274 ounce	1 ounce = 28,349 gr.
1 m^3 = 6,10234x104 $inches^3$	1 $inches^3$ = 1,6387x10-5 mm^3	1 kg. = 2,2046 pounds	1 pound = 0,4536 kg.
1 m^3 = 35,3147 $feet^3$	1 $feet^3$ = 0,0283m^3	1 kg. = 0,0197 CWT	1 CWT = 50,802 Kg.
1 m^3 = 1,3079 $yards^3$	1 $yards^3$ = 0,7645 m^3	1 ton = 0,9842 longtons	1 longton = 1,016 ton.
1 L = 0,219 gallonds (G.B.)	1 $gallonds^{(G.B)}$ = 4,566 L		
1 L = 0,264 gallonds (USA)	1 $gallonds^{(USA)}$ = 3,7878 L		

Energy		**Force**	
1J = 0,7375 lbf ft	1 lbf ft = 1,3559 J	1 N = 0,2248 lbf	1 lbf = 4,482 N
1J = 2,77x10-7 kWh	1 kWh = 3,6x106 J	1 kN= 0,1003 longtonf	1 longtonf = 9,964 kN
1J = 0,9478x10-3 Btu	1 Btu = 1055,06 J		

Areal Force	
1 N / mm^2 = 145,038 lbf / in^2	1 lbf / in^2 = 0,0069 N / mm^2

Moment of Force	
1 Nm = 141,612 ounce-inch	Ounce-inch = 0,00706 Nm
1 Nm = 8,851 pounds-inch	Pounds-inch = 0,113 Nm
1 Nm = 0,738 pounds-feet	Pounds-feet = 1,3558 Nm

NOTE :

Quality
you won’t find elsewhere
Tailor-made to your
Specification

SRISHAA

MACHINED FASTENERS PVT.LTD.

Gala No. 5, Sahakar Vijay Ind. Estate, Navghar, Vasai (E),
Palghar-401 210, Dist. Thane, Maharashtra, INDIA

+91 9892288798

info@srishaafasteners.com
srishaafasteners@gmail.com

www.srishaafasteners.com